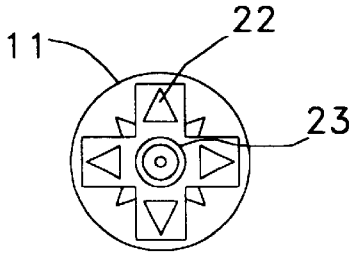

FIG 3

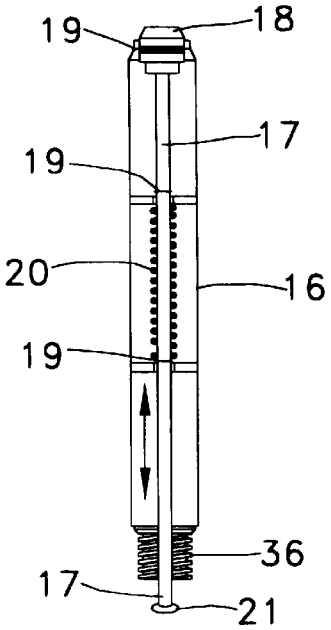

FIG 2

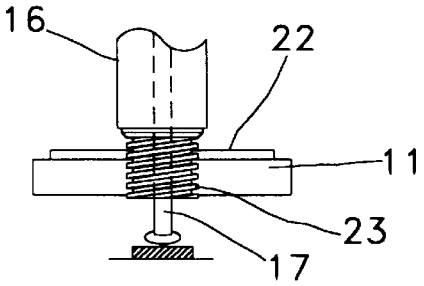

FIG 4

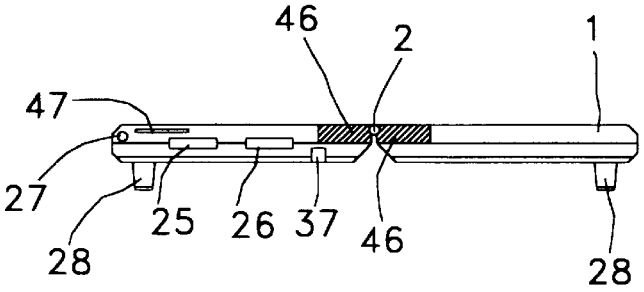

FIG 5

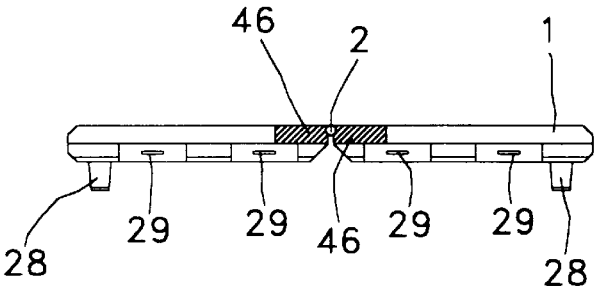

FIG 6