M. LOUGHEAD.

BRAKING APPARATUS.

APPLICATION FILED JAN. 22, 1917.

1,249,143. Patented Dec. 4, 1917.

Fig. 1.

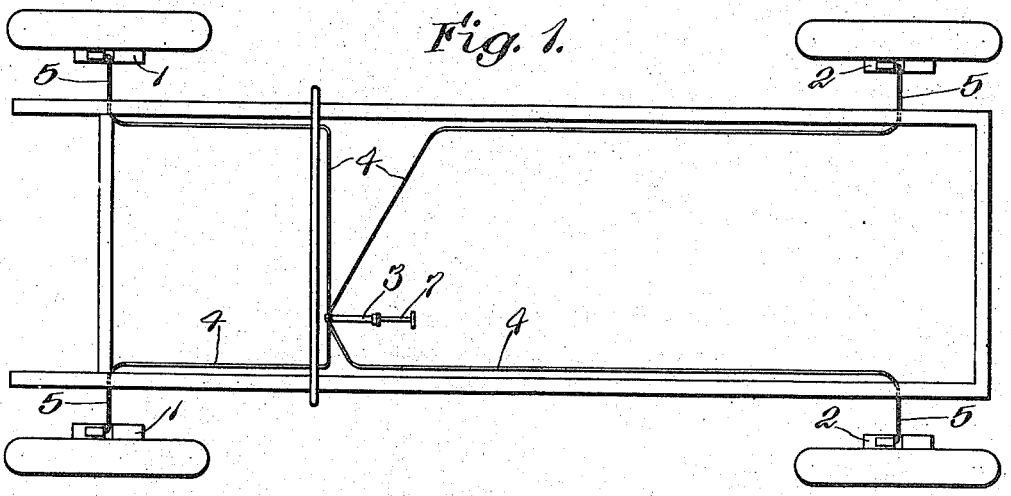

Fig. 2.

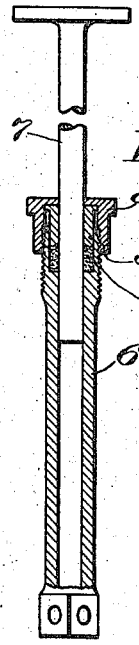

Fig. 3.

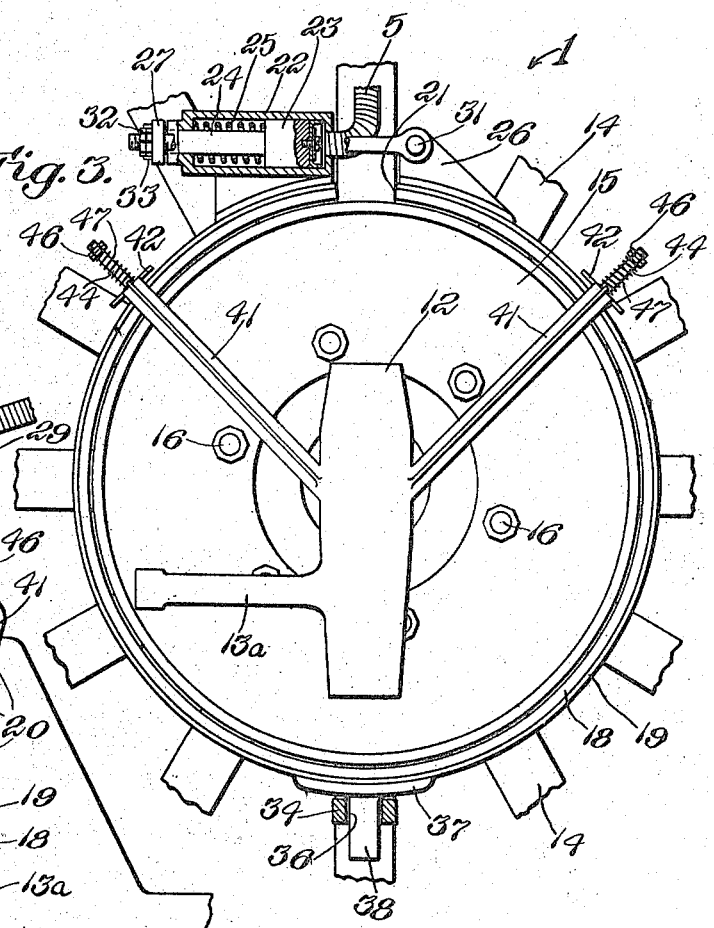

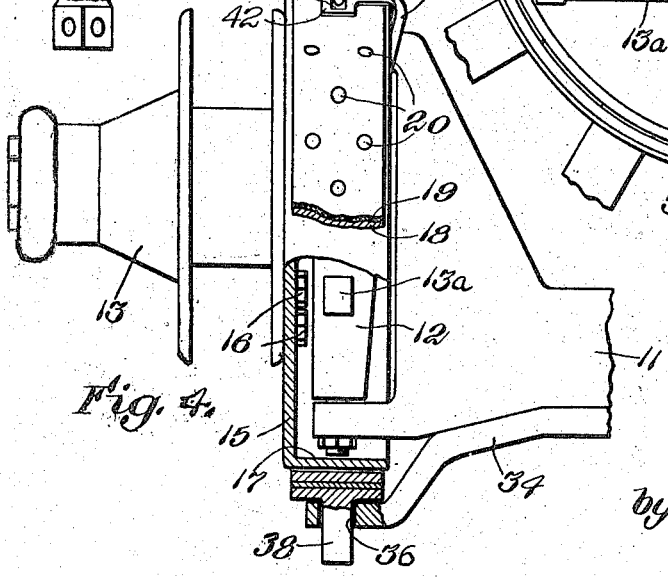

Fig. 4.

Inventor:
Malcolm Loughead
by Rohrs Rohrs & Cushman
his Attorneys.