US006046543A

United States Patent [19]

Bulovic et al.

[11] **Patent Number: 6,046,543**

[45] **Date of Patent: *Apr. 4, 2000**

[54] **HIGH RELIABILITY, HIGH EFFICIENCY, INTEGRATABLE ORGANIC LIGHT EMITTING DEVICES AND METHODS OF PRODUCING SAME**

[75] Inventors: **Vladimir Bulovic**, Metuchen; **Stephen R. Forrest**, Princeton; **Paul Burrows**, Princeton; **Dmitri Z. Garbuzov**, Princeton, all of N.J.

[73] Assignee: **The Trustees of Princeton University**, Princeton, N.J.

[*] Notice: This patent issued on a continued prosecution application filed under 37 CFR 1.53(d), and is subject to the twenty year patent term provisions of 35 U.S.C. 154(a)(2).

[21] Appl. No.: **08/774,119**

[22] Filed: **Dec. 23, 1996**

[51] **Int. Cl.**[7] **H01J 1/62**; H01J 63/04

[52] **U.S. Cl.** **313/504**

[58] **Field of Search** 313/504, 506, 313/507, 509, 499; 428/421, 690, 691

[56] **References Cited**

U.S. PATENT DOCUMENTS

4,281,053	7/1981	Tang	430/58
4,356,429	10/1982	Tang	313/504
4,670,689	6/1987	Suzuki	313/499
4,908,603	3/1990	Yamaue et al. .	
4,950,950	8/1990	Perry et al. .	
5,084,650	1/1992	Ryu	313/507
5,118,986	6/1992	Ohnuma et al.	313/504
5,122,711	6/1992	Wakimoto et al. .	
5,291,098	3/1994	Okita et al. .	
5,294,870	3/1994	Tang et al.	313/504
5,352,543	10/1994	Ryu	313/507
5,427,858	6/1995	Nakamura et al.	428/421
5,449,564	9/1995	Nishio et al.	313/504
5,457,565	10/1995	Namiki et al.	359/273
5,486,406	1/1996	Shi	313/504
5,505,985	4/1996	Nakamura et al. .	
5,529,853	6/1996	Hamada et al. .	
5,540,999	7/1996	Yamamoto et al.	313/504
5,663,573	9/1997	Epstein et al.	257/40
5,674,597	10/1997	Fuji et al.	313/504
5,703,436	12/1997	Forrest et al.	313/506
5,707,745	1/1998	Forrest et al.	428/432
5,719,467	2/1998	Antoniadis et al.	313/506
5,757,139	5/1998	Forrest et al.	313/504
5,780,174	7/1998	Tokito et al.	313/506
5,821,690	10/1998	Martens et al.	313/506

FOREIGN PATENT DOCUMENTS

0715 803 B1	10/1997	European Pat. Off. .
WO 95/06400	3/1995	WIPO .

OTHER PUBLICATIONS

Garbuzov et al., "Photoluminescence efficiency and absorption of aluminum–tris–quinolate (Alq_3) thin films", Chemical Physics Letters 249 (1996) 433–437 (no month).

Baigent et al., "Conjugated polymer light–emitting diodes on silicon substrates", Appl. Phys. Lett. 65 (21), Nov. 21, 1994, 2636–2638.

Burrows et al., "Reliability and degradation of organic light emitting devices", Appl. Phys. Lett. 65 (23), Dec. 5, 1994, 2922–2924.

Garbuzov et al., "Organic films deposited on Si p–n junctions: Accurate measurements of fluorescence internal efficiency, and application to luminescent antireflection coatings", Journal of Applied Physics, vol. 80, No. 8, Oct. 15, 1996, 4644–4648.

Tang et al., "Organic Electroluminescent Diode," Appl. Phys. Lett. 51, 913(Sep. 1987).

Primary Examiner—William Oen
Attorney, Agent, or Firm—Kenyon & Kenyon

[57] **ABSTRACT**

An organic light emitting device (OLED) having an inverted structure including a cathode layer which is deposited on a substrate and on top of which an electron transporting layer (ETL), an electroluminescent (EL) layer, a hole transporting layer (HTL), a protection layer and an anode are deposited in sequence. The inverted OLED (IOLED) provides improved longevity, flexibility and efficiency over conventional OLEDs.
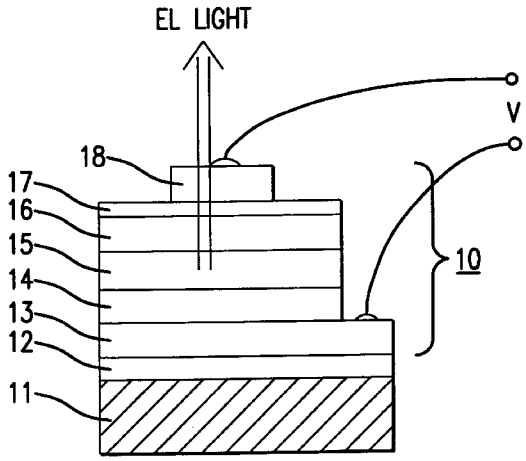
11 Claims, 8 Drawing Sheets