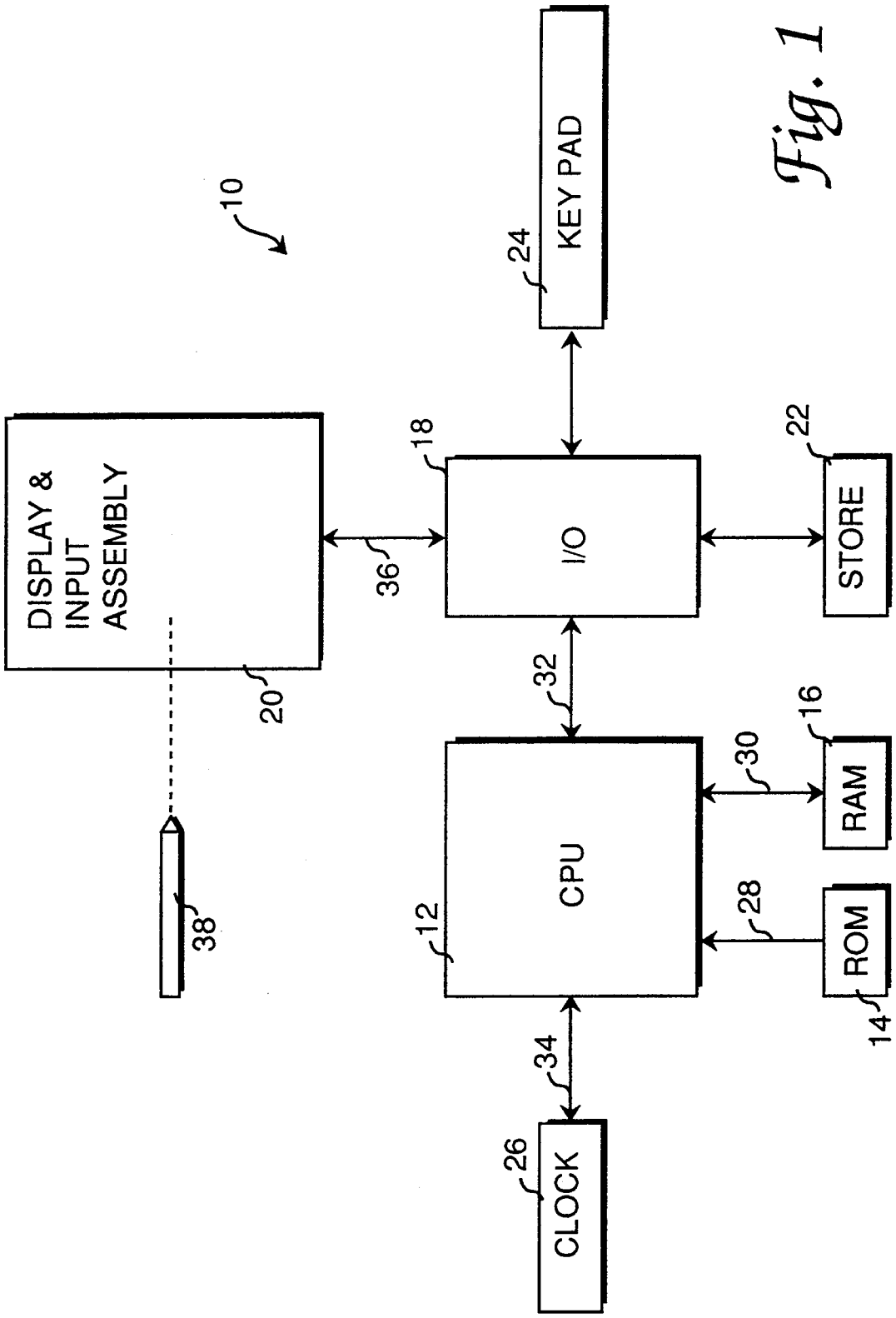
10
DISPLAY & INPUT ASSEMBLY
20
38
36
18
I/O
24
KEY PAD
22
STORE
32
12
CPU
30
16
RAM
28
ROM
14
34
26
CLOCK

Fig. 1