July 1, 1958 J. F. HALLER 2,841,543

ELECTROLYTIC PROCESS OF FORMING HYDRAZINE

Filed Oct. 20, 1953

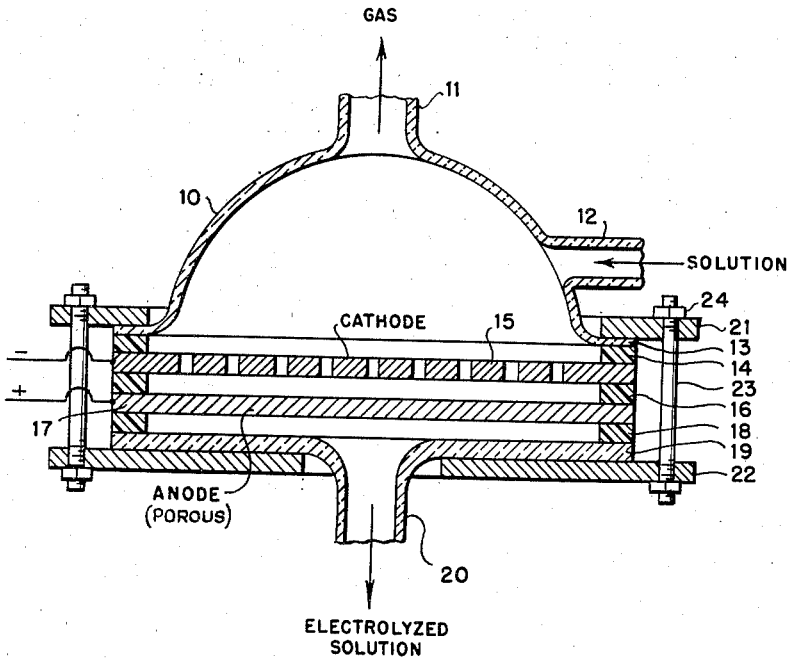

John F. Haller
INVENTOR.

BY

Adams, Forward and McLean
ATTORNEYS