US009141143B2

(12) **United States Patent**
Morita

(10) **Patent No.: US 9,141,143 B2**
(45) **Date of Patent: Sep. 22, 2015**

(54) **ELECTRONIC DEVICE**

(71) Applicant: **KABUSHIKI KAISHA TOSHIBA**, Minato-ku, Tokyo (JP)

(72) Inventor: **Hirofumi Morita**, Tokyo (JP)

(73) Assignee: **Kabushiki Kaisha Toshiba**, Tokyo (JP)

(*) Notice: Subject to any disclaimer, the term of this patent is extended or adjusted under 35 U.S.C. 154(b) by 155 days.

(21) Appl. No.: **13/936,943**

(22) Filed: **Jul. 8, 2013**

(65) **Prior Publication Data**

US 2015/0009613 A1 Jan. 8, 2015

(51) **Int. Cl.**
G06F 1/16 (2006.01)

(52) **U.S. Cl.**
CPC ***G06F 1/1652*** (2013.01)

(58) **Field of Classification Search**
USPC 361/679.02, 679.21, 679.26, 679.27, 361/679.3; 455/575.3
See application file for complete search history.

(56) **References Cited**

U.S. PATENT DOCUMENTS

6,577,496	B1 *	6/2003	Gioscia et al.	361/679.3
7,158,111	B1 *	1/2007	Jackson et al.	345/107
7,558,057	B1 *	7/2009	Naksen et al.	361/679.56
7,808,599	B2	10/2010	Nakanishi	
8,476,828	B2	7/2013	Hayashi et al.	
2006/0038745	A1 *	2/2006	Naksen et al.	345/30
2006/0050169	A1 *	3/2006	Misawa	348/333.06
2007/0211036	A1 *	9/2007	Perkins	345/173
2008/0151480	A1 *	6/2008	Chung et al.	361/681
2008/0158795	A1 *	7/2008	Aoki et al.	361/681
2008/0167095	A1 *	7/2008	Kim et al.	455/575.3
2008/0247126	A1 *	10/2008	Otsuka et al.	361/681
2012/0002360	A1 *	1/2012	Seo et al.	361/679.01
2012/0019482	A1 *	1/2012	Wang	345/175

FOREIGN PATENT DOCUMENTS

JP	2011-007986	A	1/2001
JP	2011-018097	A	1/2001
JP	2005-338699	A	12/2005
JP	2009-020207	A	1/2009

* cited by examiner

Primary Examiner — Adrian S Wilson
(74) *Attorney, Agent, or Firm* — Knobbe, Martens, Olson & Bear LLP

(57) **ABSTRACT**

According to one embodiment, an electronic device includes a bendable display device, an electric component, a first member, and a second member. The bendable display device includes an edge portion, a first face on which an image is visible, and a second face opposite the first face. The first member is configured to support the edge portion from a side of the first face, and to be separated from a center of the display device toward one side in a direction perpendicular to a thickness direction of the display device. The second member is configured to support the edge portion from a side of the second face, to be coupled with the first member, and to configure at least a portion of an enclosure containing the electric component together with the first member.
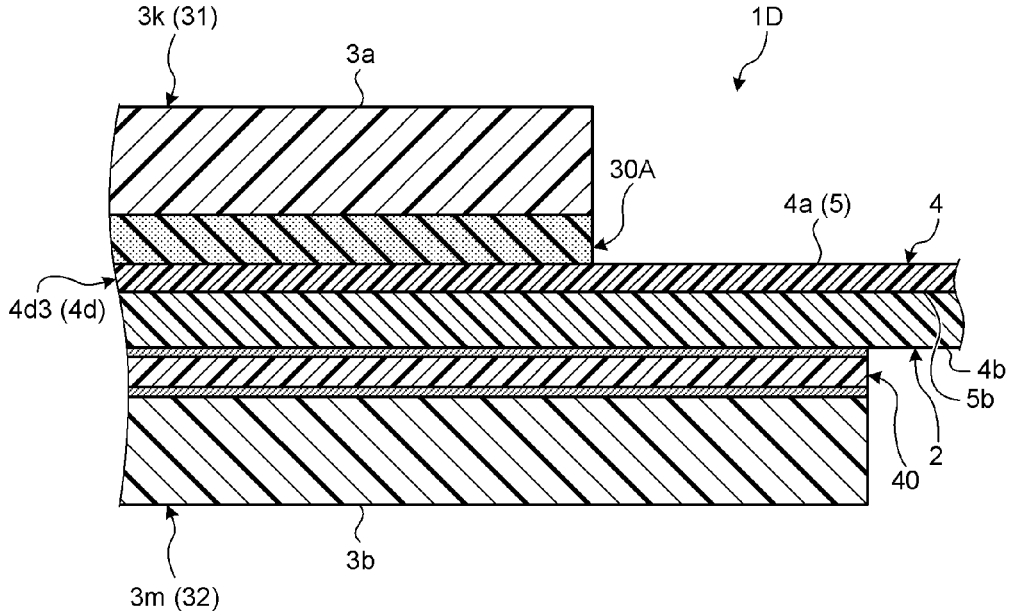
8 Claims, 10 Drawing Sheets