United States Patent [19]

Thomas

[11] **4,332,443**

[45] **Jun. 1, 1982**

[54] **CONTACT LENSES**

[76] Inventor: **Penrhyn F. Thomas,** 5 N. Arm Rd., Middle Cove, New South Wales, 2068, Australia

[21] Appl. No.: **231,544**

[22] Filed: **Feb. 4, 1981**

Related U.S. Application Data

[63] Continuation of Ser. No. 24,787, Mar. 29, 1979, abandoned.

[51] **Int. Cl.**[3] **G02C 7/04**

[52] **U.S. Cl.** ..... **351/160 H**

[58] **Field of Search** ..... 351/160 R, 162, 176

[56] **References Cited**

U.S. PATENT DOCUMENTS

1,782,331	11/1930	Wilhelm	351/160 R
3,102,157	8/1963	Gambler	351/160 R
3,246,941	4/1966	Moss	351/160 R
4,095,878	6/1978	Fanti	351/161

Primary Examiner—F. L. Evans
Assistant Examiner—Scott J. Sugarman
Attorney, Agent, or Firm—Curtis Ailes

[57] **ABSTRACT**

A corneal lens has a substantially circular optical correction zone and one or more lugs extending therefrom for engagement with depressions on the sclera of the eyeball existing between the four ocular muscles attached thereto.
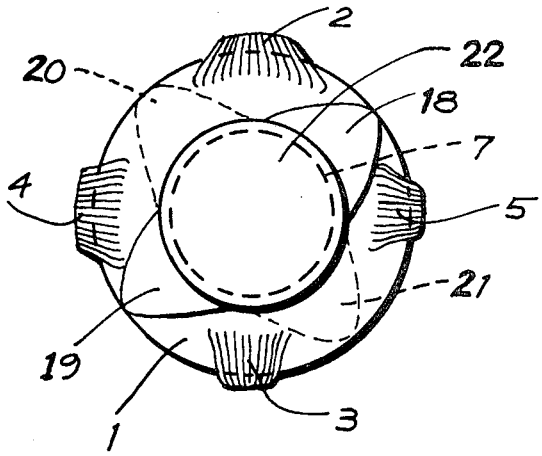
4 Claims, 6 Drawing Figures