United States Patent [19]

Bronstein

[11] **Patent Number: 4,525,043**

[45] **Date of Patent: Jun. 25, 1985**

[54] **CONTACT LENS**

[76] Inventor: **Leonard Bronstein,** 2928 N. 30th St., Phoenix, Ariz. 85016

[21] Appl. No.: **141,949**

[22] Filed: **Apr. 21, 1980**

Related U.S. Application Data

[63] Continuation-in-part of Ser. No. 850,857, Nov. 11, 1977, abandoned.

[51] **Int. Cl.**[3] **G02C 7/04;** G02C 7/06

[52] **U.S. Cl.** ..... **351/160 R;** 351/161

[58] **Field of Search** ..... 351/160 H, 160 R, 161, 351/162

[56] **References Cited**

U.S. PATENT DOCUMENTS

Re. 25,286	11/1962	De Carle	351/161
3,950,082	4/1976	Volk	351/161 X
4,302,081	11/1981	Tsuetaki	351/161
4,418,991	12/1983	Breger	351/161

Primary Examiner—John K. Corbin
Assistant Examiner—Scott J. Sugarman
Attorney, Agent, or Firm—Don J. Flickinger

[57] **ABSTRACT**

A contact lens whose posterior surface has three zones, a central, an intermediate and a peripheral. The anterior surface of the lens also has a central zone corresponding to the posterior central zone. The central zones of these surfaces form the optical zone of the lens. The posterior intermediate zone of the lens is aspheric with its radius of curvature increasing continuously from the central to the peripheral zones to cause the cornea to assume a more optimal shape. The chord diameter of the posterior central zone is equal to or less than the measured maximum radius of curvature of the central zone of the cornea and preferably larger than the largest measured diameter of the pupil of the eye of the patient. The radius of curvature of the posterior central zone is such that the difference between the sag depth of the posterior central zone of the lens and the sag depth of the corresponding corneal central zone having the greatest measured spherical radius of curvature is in the range of zero to 15 microns. The radius of curvature of the lens in conjunction with that of the posterior central zone, provides the wearer substantially normal distance vision. For the presbyope, the optical zone can be modified to provide normal near as well as distant vision. The peripheral zone is beveled to provide limbal clearance.
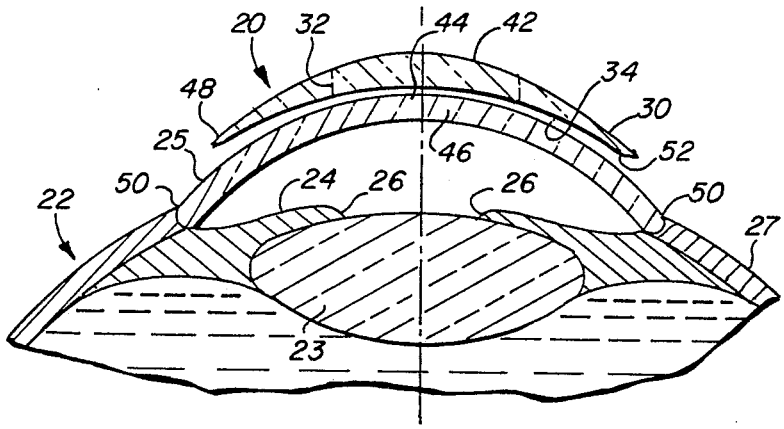
20 Claims, 12 Drawing Figures