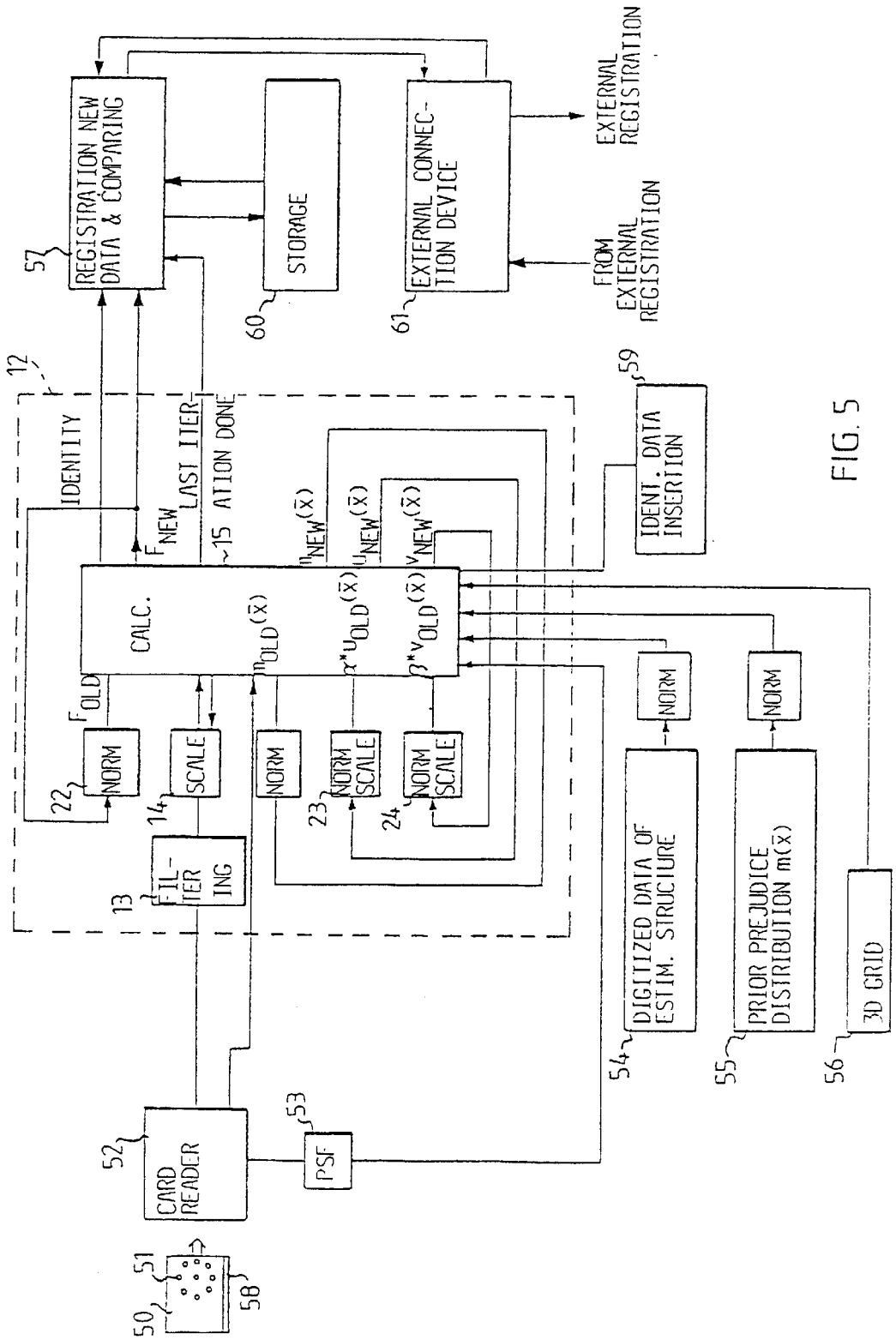
REGISTRATION NEW DATA & COMPARING
57
STORAGE
60
EXTERNAL CONNEC-TION DEVICE
61
EXTERNAL REGISTRATION
FROM EXTERNAL REGISTRATION
12
IDENTITY
LAST ITER-ATION DONE
15
CALC.
NORM
22
SCALE
14
FIL-TER ING
13
NORM
NORM SCALE
23
NORM SCALE
24
IDENT. DATA INSERTION
59
NORM
NORM
DIGITIZED DATA OF ESTIM. STRUCTURE
54
PRIOR PREJUDICE DISTRIBUTION m(x̄)
55
3D GRID
56
CARD READER
52
PSF
53
51
50
58

FIG. 5