US009410443B2

(12) **United States Patent**
**Dube et al.**

(10) **Patent No.: US 9,410,443 B2**
(45) **Date of Patent: Aug. 9, 2016**

(54) **VARIABLE VANE DAMPING ASSEMBLY**

(75) Inventors: **David P. Dube**, Saco, ME (US); **Richard K. Hayford**, Cape Neddick, ME (US)

(73) Assignee: **United Technologies Corporation**, Hartford, CT (US)

( * ) Notice: Subject to any disclaimer, the term of this patent is extended or adjusted under 35 U.S.C. 154(b) by 1128 days.

(21) Appl. No.: **13/360,002**

(22) Filed: **Jan. 27, 2012**

(65) **Prior Publication Data**

US 2013/0195651 A1 Aug. 1, 2013

(51) **Int. Cl.**

| | |
|---|---|
| ***F01D 17/16*** | (2006.01) |
| ***F01D 25/16*** | (2006.01) |
| ***F01D 25/06*** | (2006.01) |
| ***F04D 29/56*** | (2006.01) |
| *F01D 25/04* | (2006.01) |
| *F16C 27/06* | (2006.01) |

(52) **U.S. Cl.**

CPC ..... ***F01D 17/162*** (2013.01); ***F01D 25/164*** (2013.01); ***F04D 29/563*** (2013.01); *F01D 25/04* (2013.01); *F05D 2260/96* (2013.01); *F05D 2300/43* (2013.01); *F05D 2300/501* (2013.01); *F16C 27/063* (2013.01)

(58) **Field of Classification Search**

CPC ..... F01D 5/00; F01D 5/02; F01D 5/10; F01D 5/26; F01D 25/04; F01D 25/06; F01D 25/164; F04D 29/563; F05D 2300/43; F05D 2300/431; F05D 2300/437; F05D 2300/501

USPC ..... 415/148, 151, 159, 160

See application file for complete search history.

(56) **References Cited**

U.S. PATENT DOCUMENTS

| | | | | |
|---|---|---|---|---|
| 2,778,564 | A * | 1/1957 | Halford | F01D 17/162 138/46 |
| 2,932,440 | A * | 4/1960 | Hemsworth | 415/156 |
| 3,030,132 | A * | 4/1962 | Compton | 403/203 |
| 3,754,317 | A * | 8/1973 | Taylor | 29/451 |
| 4,050,844 | A * | 9/1977 | Miller et al. | 415/147 |
| 4,808,069 | A | 2/1989 | Bonner et al. | |
| 5,308,226 | A | 5/1994 | Venkatasubbu et al. | |
| 6,129,512 | A | 10/2000 | Agram et al. | |
| 6,682,299 | B2 | 1/2004 | Bowen et al. | |
| 6,767,183 | B2 | 7/2004 | Schilling et al. | |
| 6,887,035 | B2 | 5/2005 | Bruce | |
| 7,094,022 | B2 | 8/2006 | Bruce | |
| 7,121,727 | B2 | 10/2006 | Bruce et al. | |
| 7,220,098 | B2 * | 5/2007 | Bruce | F01D 17/162 415/160 |
| 7,360,990 | B2 * | 4/2008 | Barbe et al. | 415/160 |
| 2005/0232757 | A1 * | 10/2005 | Bruce | F01D 17/162 415/160 |

(Continued)

FOREIGN PATENT DOCUMENTS

| | | |
|---|---|---|
| DE | 1136350 | 9/1962 |
| EP | 1870600 | 12/2007 |
| EP | 1961922 | 8/2008 |

OTHER PUBLICATIONS

Extended European Search Report for Application No. 13151441.6 dated Mar. 22, 2016.

*Primary Examiner* — Nathaniel Wiehe
*Assistant Examiner* — Brian O Peters
(74) *Attorney, Agent, or Firm* — Carlson, Gaskey & Olds, P.C.

(57) **ABSTRACT**

A variable vane damping assembly includes an inner bushing and an outer bushing. The inner bushing comprises an elastomeric material.
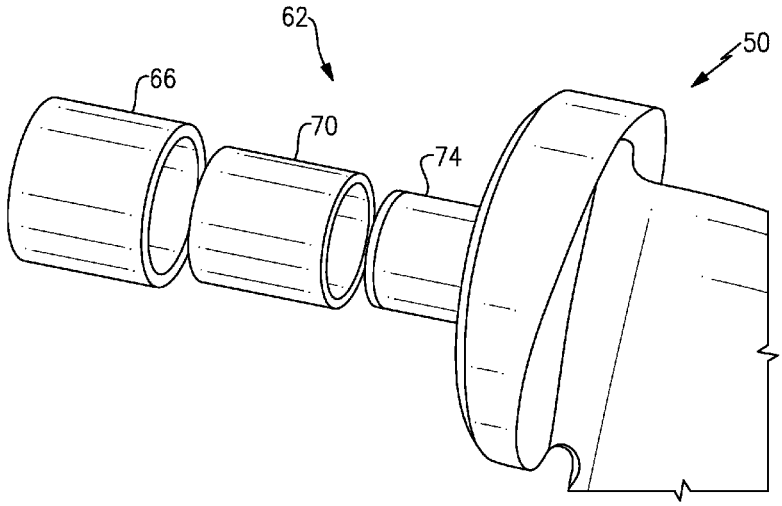
**18 Claims, 3 Drawing Sheets**