US009409443B2

(12) **United States Patent**
Khuu

(10) **Patent No.: US 9,409,443 B2**
(45) **Date of Patent: Aug. 9, 2016**

(54) **BALL BEARING BRAKING APPARATUS**

(71) Applicant: **Carttronics, LLC**, San Diego, CA (US)

(72) Inventor: **Thomas K. Khuu**, San Diego, CA (US)

(73) Assignee: **Carttronics, LLC.**, San Diego, CA (US)

(*) Notice: Subject to any disclaimer, the term of this patent is extended or adjusted under 35 U.S.C. 154(b) by 0 days.

(21) Appl. No.: **14/661,920**

(22) Filed: **Mar. 18, 2015**

(65) **Prior Publication Data**

US 2015/0217600 A1 Aug. 6, 2015

Related U.S. Application Data

(63) Continuation of application No. 14/079,931, filed on Nov. 14, 2013, now Pat. No. 8,985,282, which is a continuation of application No. 13/034,292, filed on Feb. 24, 2011, now Pat. No. 8,602,176.

(51) **Int. Cl.**

B62B 5/04	(2006.01)
B60B 33/00	(2006.01)
F16D 63/00	(2006.01)
F16D 65/02	(2006.01)
F16D 121/24	(2012.01)
F16D 125/40	(2012.01)

(52) **U.S. Cl.**

CPC ***B60B 33/0086*** (2013.01); ***B60B 33/0068*** (2013.01); ***B60B 33/0092*** (2013.01); ***B60B 33/0094*** (2013.01); ***F16D 63/006*** (2013.01); *B60B 33/0039* (2013.01); *B60B 33/0049* (2013.01); *B60B 33/0057* (2013.01); *B60B 33/0073* (2013.01); *B60B 2200/432* (2013.01); *B60B 2900/3318* (2013.01); *F16D 2065/022* (2013.01); *F16D 2121/24* (2013.01); *F16D 2125/40* (2013.01); *Y10T 16/195* (2015.01)

(58) **Field of Classification Search**

CPC . B60B 33/0084; B60B 33/0028; F16D 65/16; F16D 65/21; B62B 5/0423; B60R 25/09; B60R 25/10

USPC ..... 188/1.12, 19, 82.34, 82.74, 82.77, 188/82.84; 280/33.994; 16/35 R

See application file for complete search history.

(56) **References Cited**

U.S. PATENT DOCUMENTS

4,577,880	A *	3/1986	Bianco	B62B 5/0423 188/1.12
5,040,641	A *	8/1991	Phillips	B60B 33/0028 16/35 R
6,037,869	A *	3/2000	Lace	B60R 25/09 188/111
7,562,729	B2 *	7/2009	Hammerle	B60R 25/00 180/65.1
8,602,176	B2 *	12/2013	Khuu	B60B 33/0086 188/1.12
2004/0026209	A1 *	2/2004	Li	F16D 41/088 192/219.2
2005/0155824	A1 *	7/2005	Taba	B60R 25/09 188/19
2011/0036671	A1 *	2/2011	McKay	B60T 1/04 188/69

* cited by examiner

Primary Examiner — Christopher Schwartz

(74) *Attorney, Agent, or Firm* — Gavrilovich, Dodd & Lindsey, LLP; Charles D. Gavrilovich, Jr.

(57) **ABSTRACT**

A wheel braking apparatus includes components that inhibit the rotation of a wheel when a ball bearing is placed in a braking position between a bearing wall of a non-rotating component and a bearing barrier of a hub interface component that is at least resistively connected to a hub of the wheel. In response to a wireless signal, the ball bearing is moved from a non-braking position and allowed to travel to a braking position between a bearing barrier of one side of a bearing groove and the bearing wall of the non-rotating component.
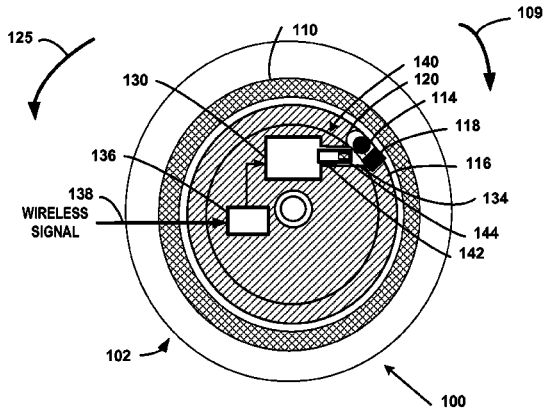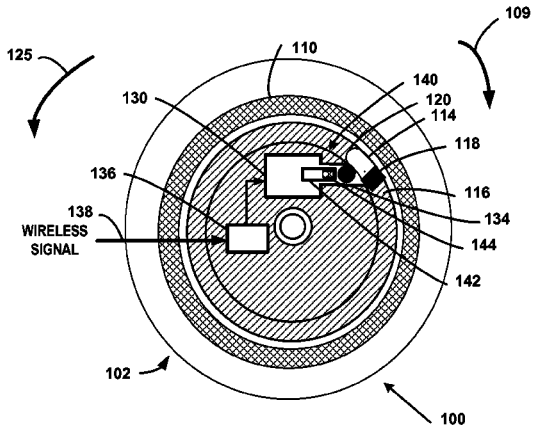
20 Claims, 20 Drawing Sheets