US009408443B2

(12) **United States Patent**
Hunter

(10) **Patent No.: US 9,408,443 B2**
(45) **Date of Patent: Aug. 9, 2016**

(54) **HANDS-FREE CRUTCH**

(71) Applicant: **iWALKFree, Inc.**, Mansfield (CA)

(72) Inventor: **Bradly Hunter**, Long Beach, CA (US)

(73) Assignee: **iWALKFree, Inc.**, Mansfield (CA)

(*) Notice: Subject to any disclaimer, the term of this patent is extended or adjusted under 35 U.S.C. 154(b) by 102 days.

(21) Appl. No.: **13/720,519**

(22) Filed: **Dec. 19, 2012**

(65) **Prior Publication Data**

US 2013/0152986 A1 Jun. 20, 2013

Related U.S. Application Data

(60) Provisional application No. 61/577,892, filed on Dec. 20, 2011.

(51) **Int. Cl.**

A61H 3/02	(2006.01)
A45B 3/00	(2006.01)
A61H 3/00	(2006.01)

(52) **U.S. Cl.**

CPC .. ***A45B 3/00*** (2013.01); ***A61H 3/02*** (2013.01); ***A61H 3/0288*** (2013.01); *A61H 2003/005* (2013.01); *A61H 2003/007* (2013.01)

(58) **Field of Classification Search**

CPC A61F 2/60; A61H 3/02; A61H 2003/005
USPC 135/67, 68, 75, 77; 623/32
See application file for complete search history.

(56) **References Cited**

U.S. PATENT DOCUMENTS

1,185,906	A	6/1916	Hoff
2,242,748	A	5/1941	Fulwiler
2,678,054	A	5/1954	Bostelman
2,827,897	A	3/1958	Pawlowski
3,074,420	A	1/1963	Gottman
4,058,119	A	11/1977	Rosequist
4,291,715	A	9/1981	Monte
5,178,595	A	1/1993	MacGregor
5,300,016	A	4/1994	Marlatt
5,575,299	A	11/1996	Bieri
5,746,236	A	5/1998	Tilsley et al.
6,494,919	B1	12/2002	Matthews
6,799,592	B1	10/2004	Reynolds
7,600,524	B2	10/2009	West

(Continued)

FOREIGN PATENT DOCUMENTS

CA	2326678	11/2006
CA	2284952	2/2009

(Continued)

OTHER PUBLICATIONS

Freedom Leg, www.freedomlegbrace.com/how_it_works.html.

Primary Examiner — Bruce E Snow

(74) *Attorney, Agent, or Firm* — Fish & Tsang, LLP

(57) **ABSTRACT**

A crutch for assisting a user to walk includes a leg platform configured to support a portion of a leg of the user, and a ground contact having a weight supporting medial contact region that is disposed higher than a weight supporting lateral contact region. An optional strap on the leg platform can be used to maintain the leg in a forward position. An optional thigh saddle can be used to help prevent lateral movement of the user's upper thigh with respect to the crutch. An optional front facing handle can assist new users in learning to use the crutch.
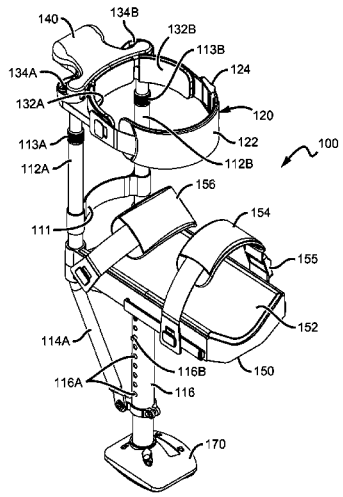
33 Claims, 6 Drawing Sheets