US005794042A

United States Patent [19]

Terada et al.

[11] Patent Number: 5,794,042

[45] Date of Patent: Aug. 11, 1998

[54] **FILE MANAGEMENT APPARATUS PERMITTING ACCESS TO PORTIONS OF A FILE BY SPECIFYING A DATA STRUCTURE IDENTIFIER AND DATA ELEMENTS**

[76] Inventors: **Hiroaki Terada**, No. B-803 Senri Ichijoike, 52 Yamadanishi 3-chome; **Hiroaki Nishikawa**, No. A-306 Mezon Senriyama, 17 Senriyamahigashi 2, chome, both of Suita-shi, Osaka-fu; **Shin-ichi Yoshida**, 5-14 Kitayagi-cho 1-chome, Kashihara-shi, Nara-ken; **Shunji Hine**, No. 637 Merodihaimu Moriguchi, 26-2 Keihanhondori 1-chome, Moriguchi-shi, Osaka-fu; **Youichiro Nishikawa**, No. 106, 9-5 Nishikonyou 1-chome, Amagasaki-shi, Hyogo-ken; **Shuji Hara**, No. 1001, 10-37 Daitou-cho 1-chome, Miyakojima-ku, Osaka-shi, Osaka-fu; **Kenji Shima**, 4-14 Koushien 2-bancho, Nishinomiya-shi, Hyogo-ken; **Yoshie Inaoka**, No. 201, 5-20 Itami 1-chome, Itami-shi, Hyogo-ken; **Tetsuo Yamasaki**, c/o Taiheiryo, 1 Andouji-cho 2-chome, Imami-shi, Hyogo-ken, all of Japan

[21] Appl. No.: **764,773**

[22] Filed: **Dec. 12, 1996**

Related U.S. Application Data

[63] Continuation of Ser. No. 320,974, Oct. 7, 1994, abandoned, which is a continuation of Ser. No. 729,730, Jul. 15, 1991, abandoned.

[30] **Foreign Application Priority Data**

Jul. 17, 1990 [JP] Japan 2-191819

[51] **Int. Cl.**[6] **G06F 9/45**

[52] **U.S. Cl.** **395/701**; 707/102; 707/203; 345/333

[58] **Field of Search** 395/619, 772, 395/701, 712, 611, 612, 613, 614, 335, 352–353; 707/1, 102, 103, 203; 345/331–333

[56] **References Cited**

U.S. PATENT DOCUMENTS

4,315,315	2/1982	Kossiakoff	395/140
4,455,619	6/1984	Masui et al.	395/160
4,481,607	11/1984	Kobayashi et al.	364/419.02
4,558,413	12/1985	Schmidt et al.	395/600
4,571,700	2/1986	Emry, Jr. et al.	364/419.19
4,656,603	4/1987	Dunn	395/1
4,731,734	3/1988	Gruner et al.	395/375

(List continued on next page.)

FOREIGN PATENT DOCUMENTS

59-125461	7/1984	Japan .
60-027040	2/1985	Japan .

OTHER PUBLICATIONS

"The C Programming Language" Second Edition, Prentice Hall Software Series, Kernighan & Richie, Chapter 5: Pointers and Arrays, pp. 93–95, Jun. 1978.

(List continued on next page.)

Primary Examiner—Thomas G. Black
Assistant Examiner—Hosain T. Alam
Attorney, Agent, or Firm—McDermott, Will & Emery

[57] **ABSTRACT**

A file management apparatus includes a file storage portion and a manipulation portion. The file storage portion stores a plurality of files therein. Each file includes one or more data structures. Each data structure includes one or more elements. The file storage portion further identifies each file with a file identifier and identifies each data structure within the file with an internal identifier and with the number of data structures contained in the file. The position of each data element and the number of data elements within a data structure are also identified. The manipulation portion manipulates the structure of the data stored in the file storage portion by employing the file identifier, the data structure identifier, and element position.
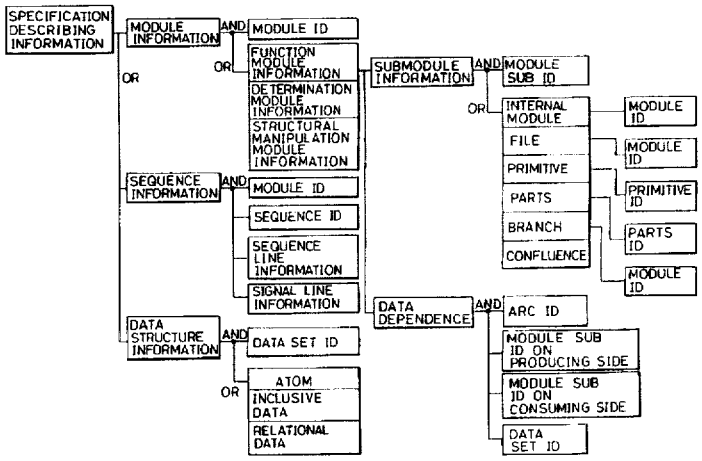
4 Claims, 38 Drawing Sheets