US006288742B1

(12) **United States Patent**
Ansari et al.

(10) **Patent No.: US 6,288,742 B1**
(45) **Date of Patent: Sep. 11, 2001**

(54) **VIDEO CAMERA INCLUDING MULTIPLE IMAGE SENSORS**

(75) Inventors: **Ahmad C. Ansari**, Eatontown; **Behzad Shahraray**, Freehold; **Matthew S. Whalen**, Rumson, all of NJ (US)

(73) Assignee: **Lucent Technologies Inc.**, Murray Hill, NJ (US)

(*) Notice: Subject to any disclaimer, the term of this patent is extended or adjusted under 35 U.S.C. 154(b) by 0 days.

(21) Appl. No.: **08/863,120**

(22) Filed: **May 27, 1997**

Related U.S. Application Data

(63) Continuation of application No. 08/531,982, filed on Sep. 21, 1995, now abandoned.

(51) **Int. Cl.**[7] **H04N 5/232**

(52) **U.S. Cl.** **348/212**; 348/14.08; 348/218; 348/222; 348/241

(58) **Field of Search** 358/906, 909.1; 348/13, 15, 16, 143, 169, 207, 211–213, 222, 241, 243, 280, 279, 552, 607, 608, 14.01, 14.02, 14.05, 14.08, 14.09

(56) **References Cited**

U.S. PATENT DOCUMENTS

264,343		5/1882	Che	D16/7
3,636,270	*	1/1972	McIntosh et al.	179/84 VF
3,748,992		7/1973	Anger	95/36
4,091,422	*	5/1978	Amster	358/210
4,097,882		6/1978	Engelsmann	354/197
4,104,663		8/1978	Yamazaki et al.	354/197
4,670,786	*	6/1987	Ricciardi	348/518
4,943,850	*	7/1990	Asaida	358/55
4,967,220		10/1990	Ho	354/204
5,003,378	*	3/1991	Murao	358/29
5,051,821	*	9/1991	Vittot et al.	358/81
5,068,738	*	11/1991	Miida	358/227
5,130,814		7/1992	Spencer	358/335
5,157,499		10/1992	Oguma et al.	358/213.11
5,159,455		10/1992	Cox	358/213.11
5,164,753		11/1992	Fritzer	354/120
5,264,944		11/1993	Takemura	358/335
5,280,186		1/1994	Lee	257/232
5,294,951		3/1994	Lo	354/111
5,321,528		6/1994	Nakamura	358/482
5,343,243		8/1994	Maeda	348/222
5,359,363	*	10/1994	Kuban	348/143
5,367,331		11/1994	Secher et al.	348/14
5,371,540		12/1994	Tamura et al.	348/222
5,428,386	*	6/1995	D'Alfonso	348/264
5,436,660	*	7/1995	Sakamoto	348/207
5,448,294	*	9/1995	Yamazaki	348/230
5,486,853	*	1/1996	Baxter et al.	348/222
5,488,413	*	1/1996	Elder et al.	348/13
5,696,553	*	12/1997	D'Alfonso	348/211

OTHER PUBLICATIONS

Flanagan et al., Commuter–steered microphone arrays for sound transduction in large rooms, J. Acoust. Soc. Am., vol. 78, No. 5, pp. 1508–1518, Nov. 1985.

Hitachi Application Note: Digital Movie Camera Demonstration System MV–DS6A.

* cited by examiner

Primary Examiner—Wendy R. Garber
Assistant Examiner—Ngoc-Yen Vu

(57) **ABSTRACT**

A digital camera comprising a first lens for focusing a first image, a second lens for focusing a second image, a first sensor for converting a light intensity and color pattern of the first image into a first electrical signal, a second sensor for converting a light intensity and color pattern of the second image into a second electrical signal, a processing unit for processing the first electrical signal and the second electrical signal and a switch for selectively coupling either the first electrical signal or the second electrical signal to the processing unit.
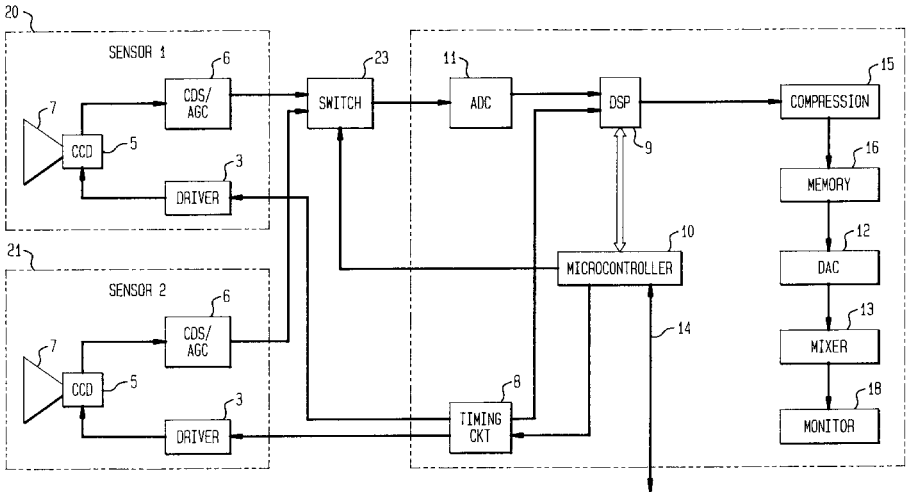
7 Claims, 7 Drawing Sheets