Aug. 24, 1954

V. B. SPECTOR

DOOR CONSTRUCTION

Filed Dec. 15, 1950

2,686,942

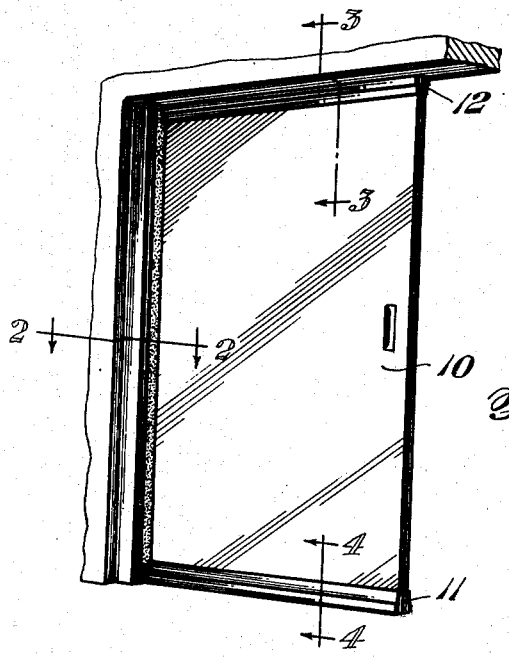

Fig. 1.

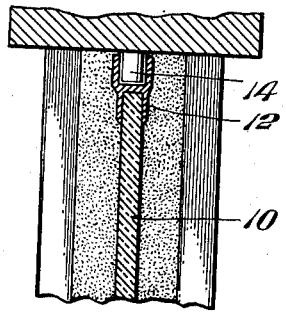

Fig. 3.

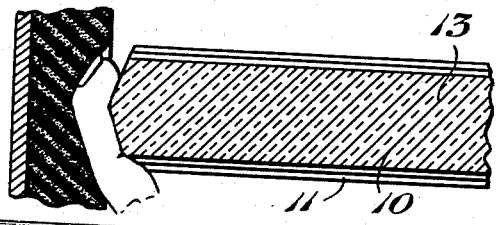

Fig. 5.

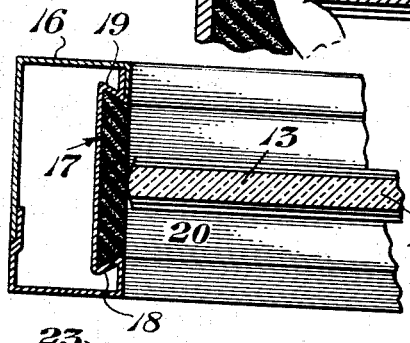

Fig. 2.

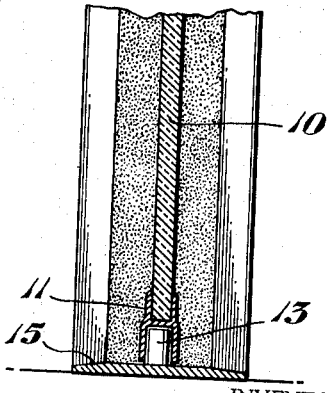

Fig. 4.

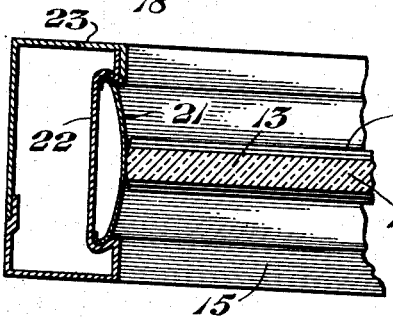

Fig. 6.

INVENTOR

Victor B. Spector

BY

Flocks and Simon

ATTORNEYS