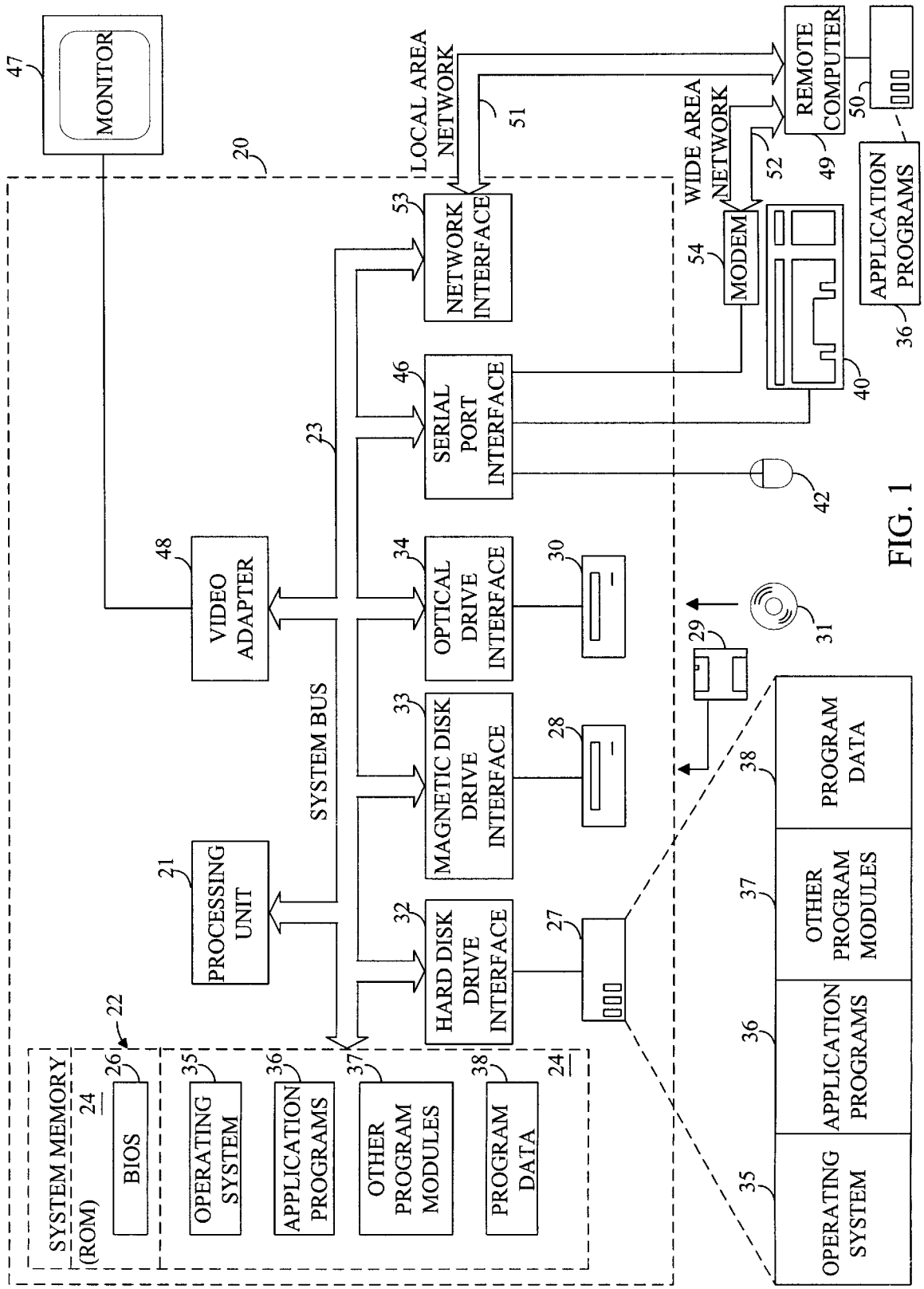
MONITOR
47
20
LOCAL AREA NETWORK
51
REMOTE COMPUTER
50
49
52
WIDE AREA NETWORK
APPLICATION PROGRAMS
36
53
NETWORK INTERFACE
54
MODEM
40
46
SERIAL PORT INTERFACE
23
42
48
VIDEO ADAPTER
34
OPTICAL DRIVE INTERFACE
30
29
31
SYSTEM BUS
33
MAGNETIC DISK DRIVE INTERFACE
28
21
PROCESSING UNIT
32
HARD DISK DRIVE INTERFACE
27
22
SYSTEM MEMORY (ROM)
24
26
BIOS
35
OPERATING SYSTEM
36
APPLICATION PROGRAMS
37
OTHER PROGRAM MODULES
38
PROGRAM DATA
24
38
PROGRAM DATA
37
OTHER PROGRAM MODULES
36
APPLICATION PROGRAMS
35
OPERATING SYSTEM

FIG. 1