MULTIFOCAL OPHTHALMIC LENS

Filed Jan. 15, 1940 2 Sheets-Sheet 2

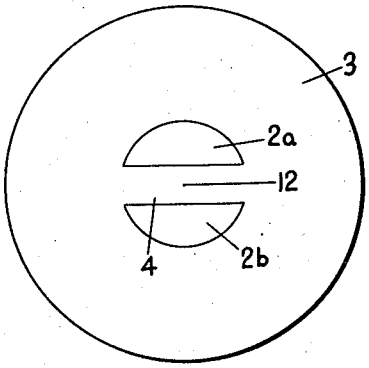

Fig. 7

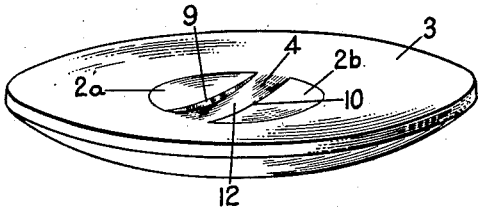

Fig. 8

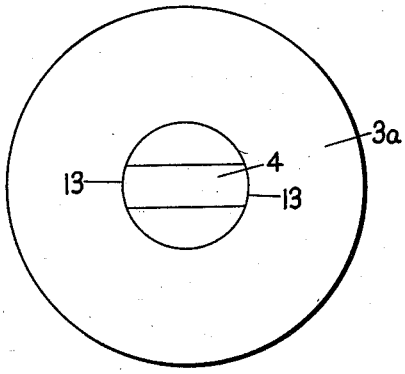

Fig. 9

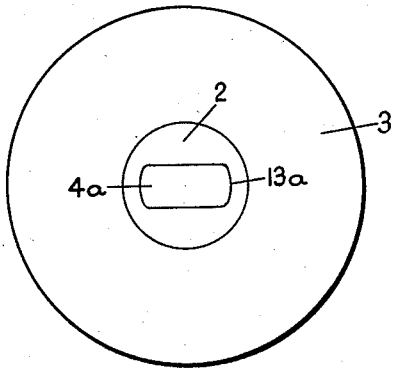

Fig. 10

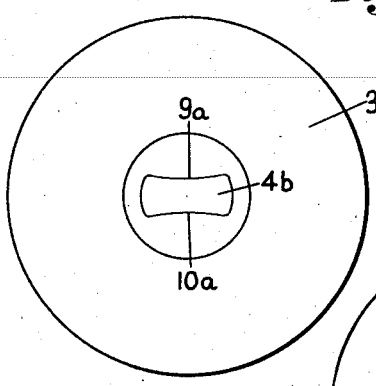

Fig. 11

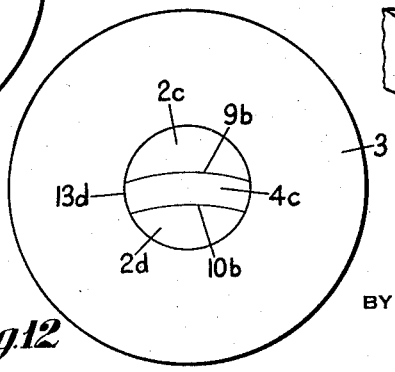

Fig. 12

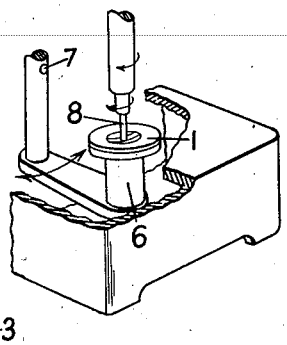

Fig. 13

INVENTOR
Lowell L. Houchin.
BY Corlett + Mahoney
ATTORNEYS