US005258042A

United States Patent [19]

Mehta

[11] Patent Number: 5,258,042

[45] Date of Patent: Nov. 2, 1993

[54] **INTRAVASCULAR HYDROGEL IMPLANT**

[75] Inventor: **Bharat Mehta**, West Bloomfield, Mich.

[73] Assignee: **Henry Ford Health System**, Detroit, Mich.

[21] Appl. No.: **809,265**

[22] Filed: **Dec. 16, 1991**

[51] **Int. Cl.**[5] **A61F 2/54**; A61F 2/04; A61F 2/06; A61M 31/00

[52] **U.S. Cl.** **623/66**; 623/1; 623/12; 604/49; 606/108

[58] **Field of Search** 623/1, 2, 12, 66, 500, 623/901; 604/96, 51-54; 606/108, 153

[56] **References Cited**

U.S. PATENT DOCUMENTS

4,140,126	2/1979	Choudhury	623/1 X
4,286,341	9/1981	Greer et al.	623/1
4,562,596	1/1986	Kornberg	623/1
4,577,631	3/1986	Kreamer	623/1 X
4,663,358	5/1987	Hyon et al.	521/64
4,734,097	3/1988	Tanabe et al.	623/11
4,740,207	4/1988	Kreamer	623/1
4,852,568	8/1989	Kensey	623/1 X
4,990,582	2/1991	Salamone	526/245
5,078,726	1/1992	Kreamer	623/1 X
5,084,065	1/1992	Weldon et al.	623/1

FOREIGN PATENT DOCUMENTS

0107055	5/1984	European Pat. Off.	623/11
0441516	8/1991	European Pat. Off.	623/11
2139898	11/1984	United Kingdom	623/11

OTHER PUBLICATIONS

Serbinenko F. A. "Balloon Catheterization and . . . Cerebral Vessels", J. Neurosurg. 1974; 41: 125-145.

Romodanov A. P., et al., "Intravascular Occlusion . . . Catheter", In Advances & Technical Standards, vol. 9, 1982; 25-49.

Hieshima G. B. et al., "A Detachable . . . Occlusion", Radiology 1981; 138: 227-228.

Guglielmi G., et al., "Electrothrombosis of . . . Results", J. Neurosurg. 1991; 75: 1-7.

Guglielmi G., et al., "Electrothrombosis of . . . Experience", J. Neurosurg. 1991; 75: 8-14.

Sigwart V., et al., "Intravascular . . . Angioplasty", N. England J. Med., 1987; 316: 701-706.

Duprat G. Jr., et al., "Self Expanding . . . Evaluation", Radiology 1987; 162: 469-472.

Strecker E. P., "Flexible, Balloon . . . Results", Radiology 1988; 169: 388.

Paper No. 199, American Society of Neuroradiology, 29th Annual Meeting, Washington, D.C., Jun. 9-14, 1991.

Paper No. 200, American Society of Neuroradiology, 29th Annual Meeting, Washington, D.C., Jun. 9-14, 1991.

Primary Examiner—Randall L. Green
Assistant Examiner—Dinh X. Nguyen
Attorney, Agent, or Firm—Barnes, Kisselle, Raisch, Choate, Whittemore & Hulbert

[57] **ABSTRACT**

A vascular structure, including an artery, vein or vessel, with a peripheral wall defining a cavity and having a localized abnormal wall is treated by inserting a device of a hydrogel material into the cavity; and then hydrating and expanding the hydrogel material until the device occludes the localized abnormal wall, sealing it from the cavity of the vascular structure.
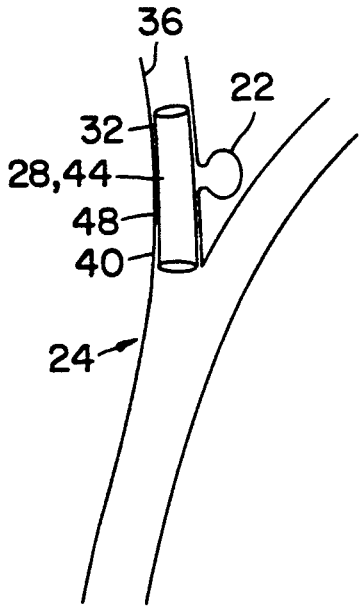
6 Claims, 3 Drawing Sheets