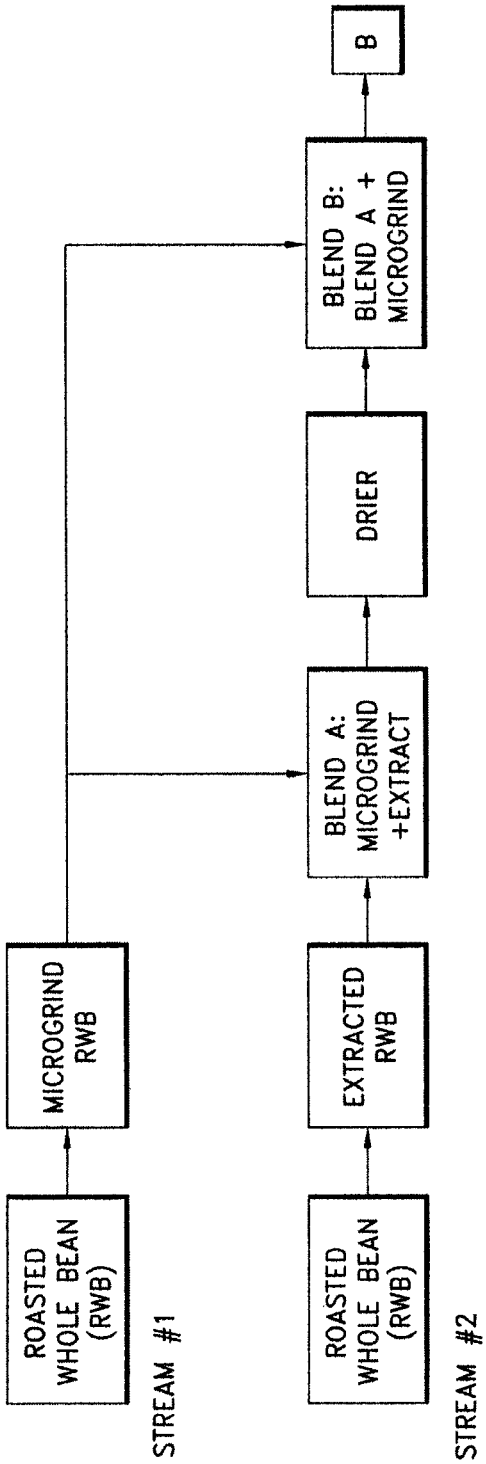
ROASTED WHOLE BEAN (RWB)
MICROGRIND RWB
STREAM #1
ROASTED WHOLE BEAN (RWB)
EXTRACTED RWB
STREAM #2
BLEND A: MICROGRIND +EXTRACT
DRIER
BLEND B: BLEND A + MICROGRIND
B

FIG. 1