US005113042A

United States Patent [19]

Mletzko

[11] Patent Number: 5,113,042

[45] Date of Patent: May 12, 1992

[54] DIGITIZER TABLET WITH REDUCED RADIATION SUSCEPTIBILITY

[75] Inventor: Alfred E. Mletzko, Woodbury, Conn.

[73] Assignee: Summagraphics Corporation, Seymour, Conn.

[21] Appl. No.: 615,981

[22] Filed: Nov. 20, 1990

[51] Int. Cl.[5] G08C 21/00

[52] U.S. Cl. 178/19

[58] Field of Search 178/18, 19

[56] References Cited

U.S. PATENT DOCUMENTS

3,873,770 3/1975 Ioannou .
3,904,822 9/1975 Kamm et al. .
4,368,351 1/1983 Zimmer .
4,794,208 12/1988 Watson 178/19
4,859,814 8/1989 Sciacero et al. 178/19
4,896,002 1/1990 Papsin .

OTHER PUBLICATIONS

Graphic Details, Stanford Diehl and Steve Apiki, Jan. 1989, Byte Magazine, pp. 162–174.

Primary Examiner—Stafford D. Schreyer
Attorney, Agent, or Firm—Rosen, Dainow & Jacobs

[57] ABSTRACT

A digitizer tablet capable of reduced coordinate wobble due to beat interference between an induced display scan rate and the tablet scan rate by introducing a controlled delay to change the time between successive samples to increase the beat frequency to the point where it can be effectively filtered out.
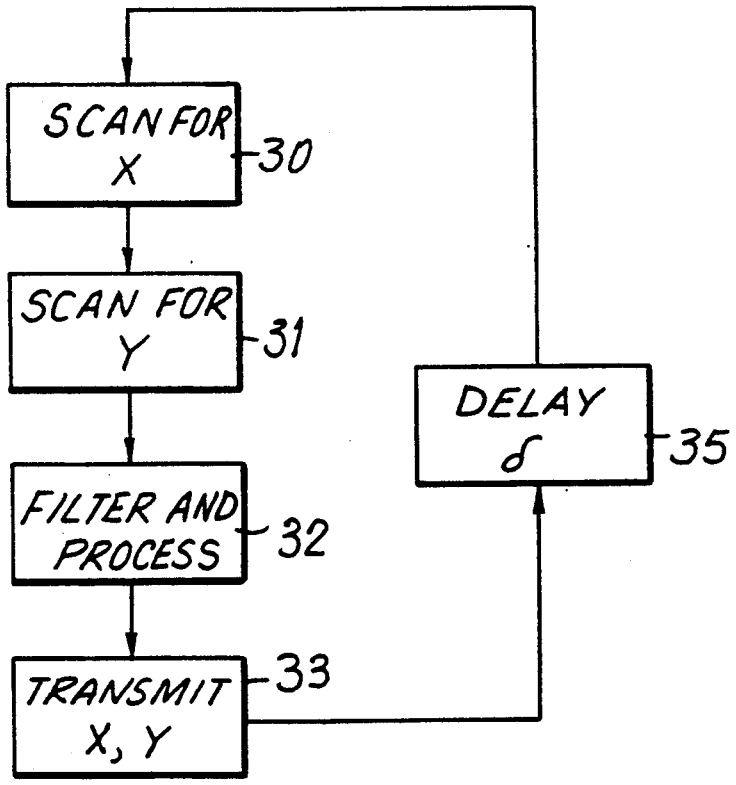
16 Claims, 3 Drawing Sheets