US009410342B2

(12) **United States Patent**
Napier

(10) **Patent No.: US 9,410,342 B2**
(45) **Date of Patent: Aug. 9, 2016**

(54) **CLIMATE CONTROLLED PORTABLE DWELLING AND METHOD OF USE**

(75) Inventor: **James A. Napier**, Edgefield, SC (US)

(73) Assignee: **Outdoor Advantage Connection LLC**, Belvedere, SC (US)

(*) Notice: Subject to any disclaimer, the term of this patent is extended or adjusted under 35 U.S.C. 154(b) by 246 days.

(21) Appl. No.: **10/714,143**

(22) Filed: **Nov. 15, 2003**

(65) **Prior Publication Data**

US 2005/0103370 A1 May 19, 2005

(51) **Int. Cl.**
E04H 15/32 (2006.01)
E04H 15/14 (2006.01)

(52) **U.S. Cl.**
CPC ***E04H 15/32*** (2013.01); ***E04H 15/14*** (2013.01)

(58) **Field of Classification Search**
CPC E04H 15/32; E04H 15/14
USPC ..... 52/79.1, 79.5, 79.9, 2.11, 2.22, 14, 52/2.25, 3, DIG. 13–DIG. 14; 135/93, 94, 135/124, 125
See application file for complete search history.

(56) **References Cited**

U.S. PATENT DOCUMENTS

1,317,271 A * 9/1919 Crosely 296/145
2,288,538 A * 6/1942 Morrison 454/237
2,343,581 A * 3/1944 Reeves 62/217
2,658,439 A * 11/1953 Royal 454/119
2,664,890 A * 1/1954 Wallace 128/205.26
2,939,467 A * 6/1960 Meyer et al. 52/2.13
3,059,657 A * 10/1962 Turner 52/2.24
3,159,165 A * 12/1964 Cohen et al. 52/1
3,261,659 A * 7/1966 Schwichtenberg et al. 422/4
3,265,059 A 8/1966 Mathews
3,272,199 A * 9/1966 Matthews 600/21
3,293,405 A * 12/1966 Costanzo 219/211
3,335,529 A * 8/1967 Gedney 52/2.14
3,353,309 A * 11/1967 Kwake 52/2.14
3,452,764 A * 7/1969 Bell 135/124
3,766,844 A 10/1973 Donnelly et al.
3,839,832 A * 10/1974 Kastner 52/2.14
3,848,279 A 11/1974 Ipsen
4,000,749 A * 1/1977 Busco 600/21
4,076,551 A * 2/1978 Bernhard et al. 106/417
4,164,829 A * 8/1979 Sadler 52/2.14
4,192,352 A * 3/1980 Hakamada et al. 138/149
4,296,960 A 10/1981 Winchester
4,308,905 A * 1/1982 Gallagher 150/165
4,332,114 A * 6/1982 Goebel et al. 62/262
4,369,591 A * 1/1983 Vicino 40/610
4,473,826 A * 9/1984 Pusch et al. 342/5
4,625,468 A * 12/1986 Hampel 52/2.24
4,784,172 A 11/1988 Yacoboni
4,974,829 A 12/1990 Gamow et al.
5,240,021 A 8/1993 Snodgrass
5,331,991 A 7/1994 Nilsson
5,706,846 A * 1/1998 Sutton 135/128
5,715,854 A * 2/1998 Andrieux et al. 135/94

(Continued)

FOREIGN PATENT DOCUMENTS

EP 0 345 600 A1 12/1989

Primary Examiner — Jeanette E Chapman
(74) *Attorney, Agent, or Firm* — Technology Legal Counsel LLC

(57) **ABSTRACT**

The present invention relates generally to climate control systems directed to regulating the ambient temperature within a portable dwelling, and more particularly to manufactured tents, after-market tent adapter kits and methods for utilizing these tents and adapter kits to regulate temperature preferably in the outdoors.
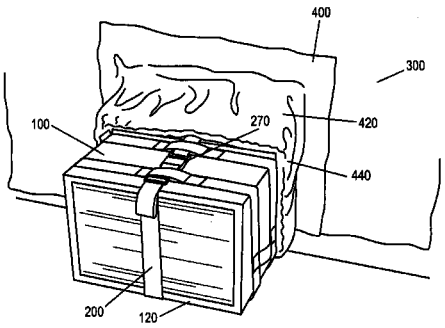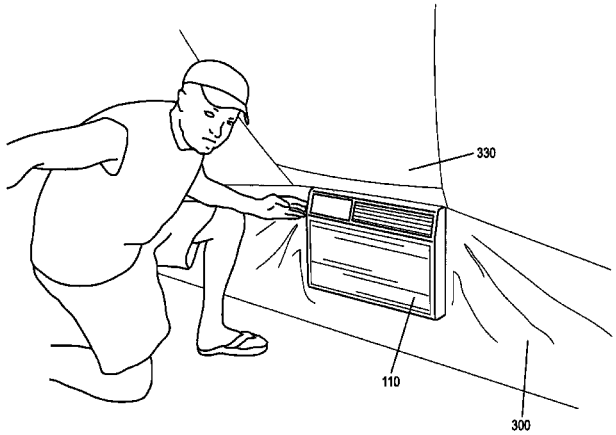
18 Claims, 5 Drawing Sheets