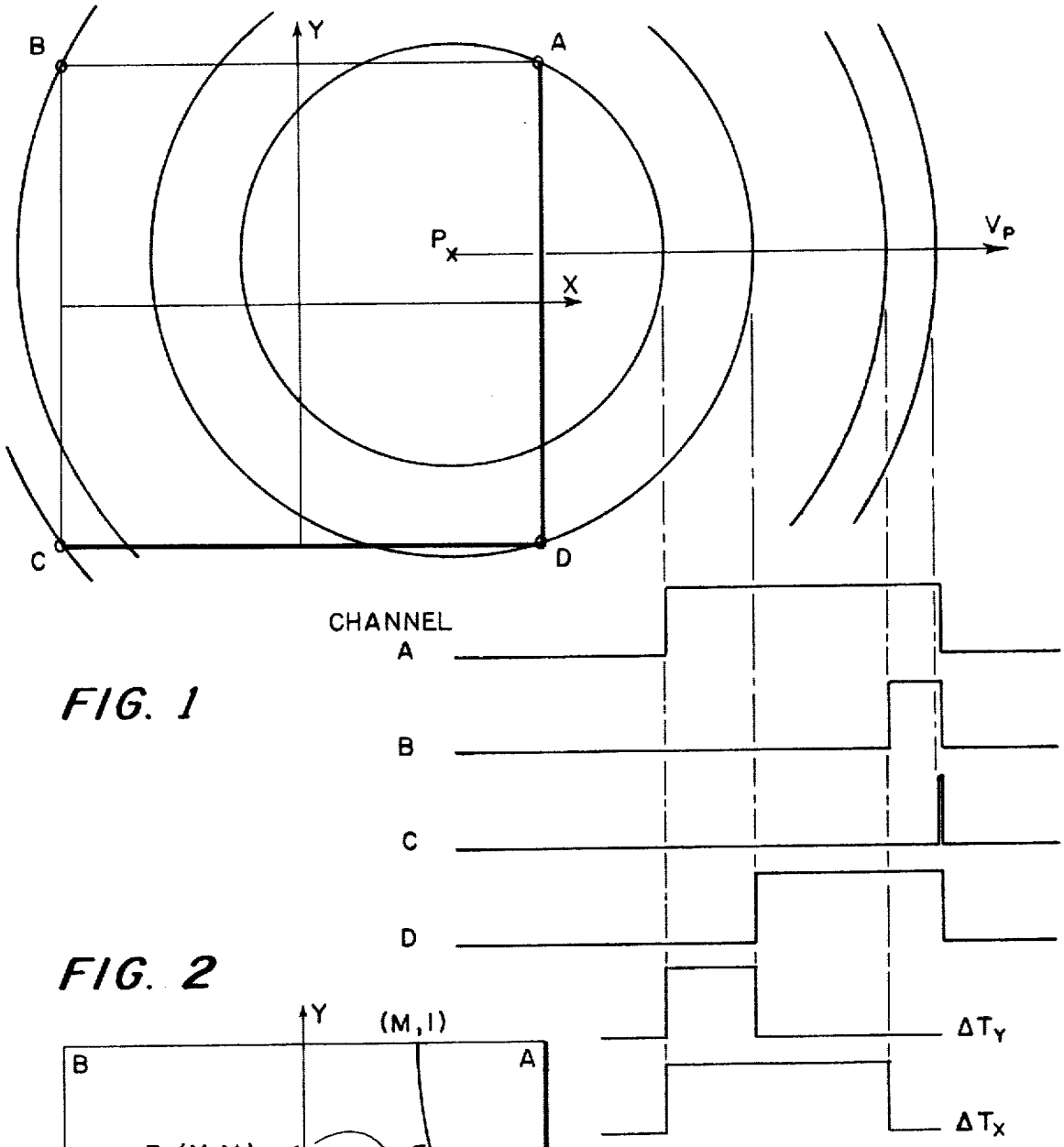
B
Y
A
P_X
V_P
X
C
D
CHANNEL
A
B
C
D
ΔT_Y
ΔT_X

FIG. 1

FIG. 2

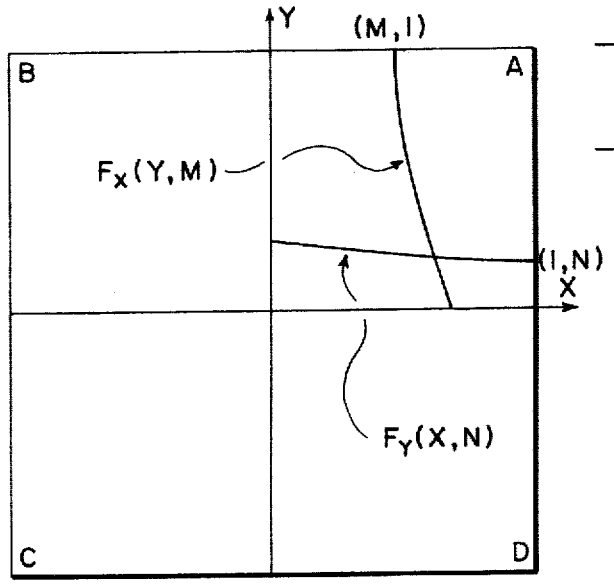
Y
(M,I)
B
A
$F_X(Y,M)$
(I,N)
X
$F_Y(X,N)$
C
D