Fig. 1A
Prior Art

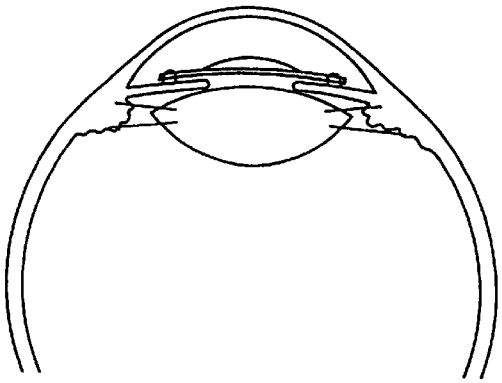

Fig. 1B
Prior Art

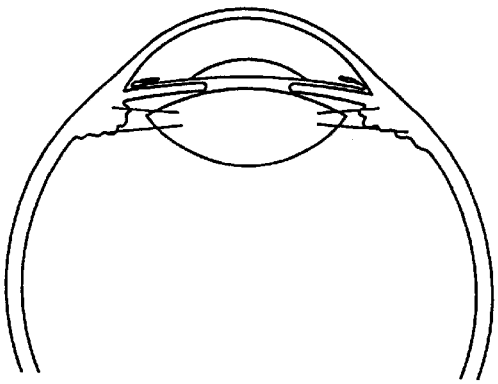

Fig. 1D
Prior Art

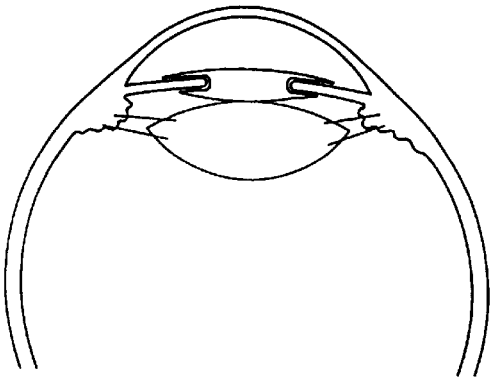

Fig. 1C
Prior Art

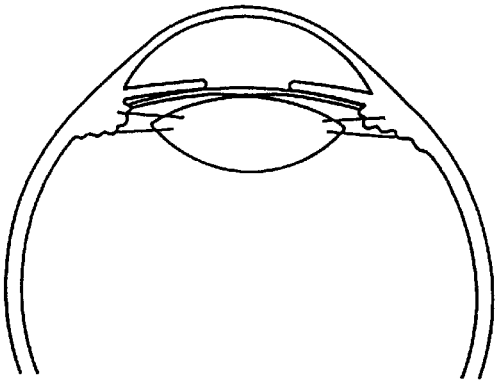
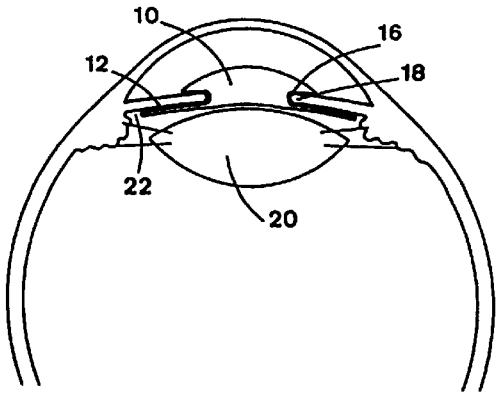
Fig. 1E