United States Patent [19]

Forrest

[11] **3,886,341**

[45] **May 27, 1975**

[54] **SWITCH OPERATING DEVICE FOR USE WITH AN OVER CENTER DIAPHRAGM SWITCH CONTACT ASSEMBLY WITH CONTACT RAMP CAMMING SURFACE**

[75] Inventor: **John W. Forrest,** West Acton, Mass.

[73] Assignee: **Bowman/Ali, Inc.,** Acton, Mass.

[22] Filed: **May 2, 1973**

[21] Appl. No.: **356,631**

[52] **U.S. Cl.** ..... **200/328;** 200/159 B; 200/153 LA; 200/60; 200/157

[51] **Int. Cl.** **H01h 9/22**

[58] **Field of Search** ..... 200/159 B, 166 G, 166 PC, 200/5 A, 5 R, 153 LA, 169 PB, 157, 60, 239, 321, 322, 328, 340

[56] **References Cited**

UNITED STATES PATENTS

1,592,225	7/1926	Pieper	200/157
2,992,307	7/1961	Reifel	200/166 G
3,725,907	4/1973	Boulanger	200/5 A

FOREIGN PATENTS OR APPLICATIONS

1,225,262	9/1966	Germany	200/169 PB

Primary Examiner—Robert K. Schaefer
Assistant Examiner—Gerald P. Tolin

[57] **ABSTRACT**

An operating device for use with an over center diaphragm switch contact assembly which includes a contact supporting board, a fixed contact, and an over center diaphragm contact resiliently deformable from a first position spaced apart from said fixed contact to a second position in electrical contact therewith. The operating device includes a guide plate having a slot therein and a knob element slidably received in the slot. The knob element includes a ramp surface which slidably, frictionally engages the surface of the guide plate proximal the diaphragm contact and a nib portion which slidably engages the diaphragm contact and arranged such that sliding movement of the knob element longitudinally within the slot operates the diaphragm contact from its first position to its second position. The ramp surface of the knob element maintains the diaphragm contact in electrical contact with the fixed contact whereby the operating device converts the resilient diaphragm contact assembly into a bistable "on-off" switch.
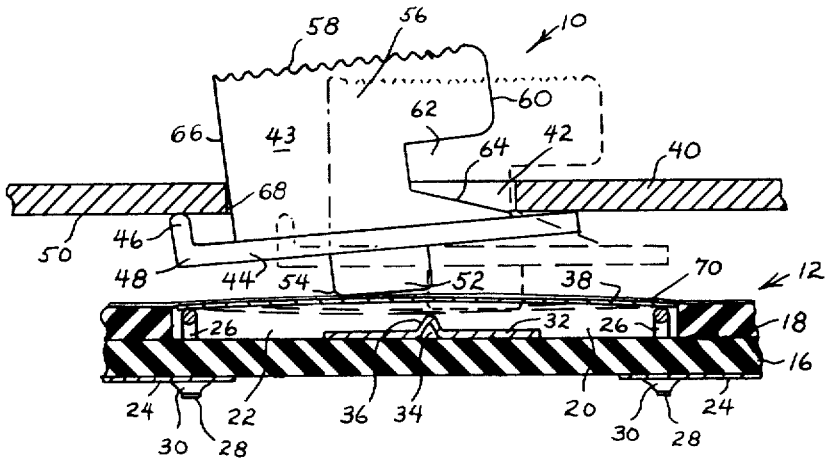
7 Claims, 3 Drawing Figures