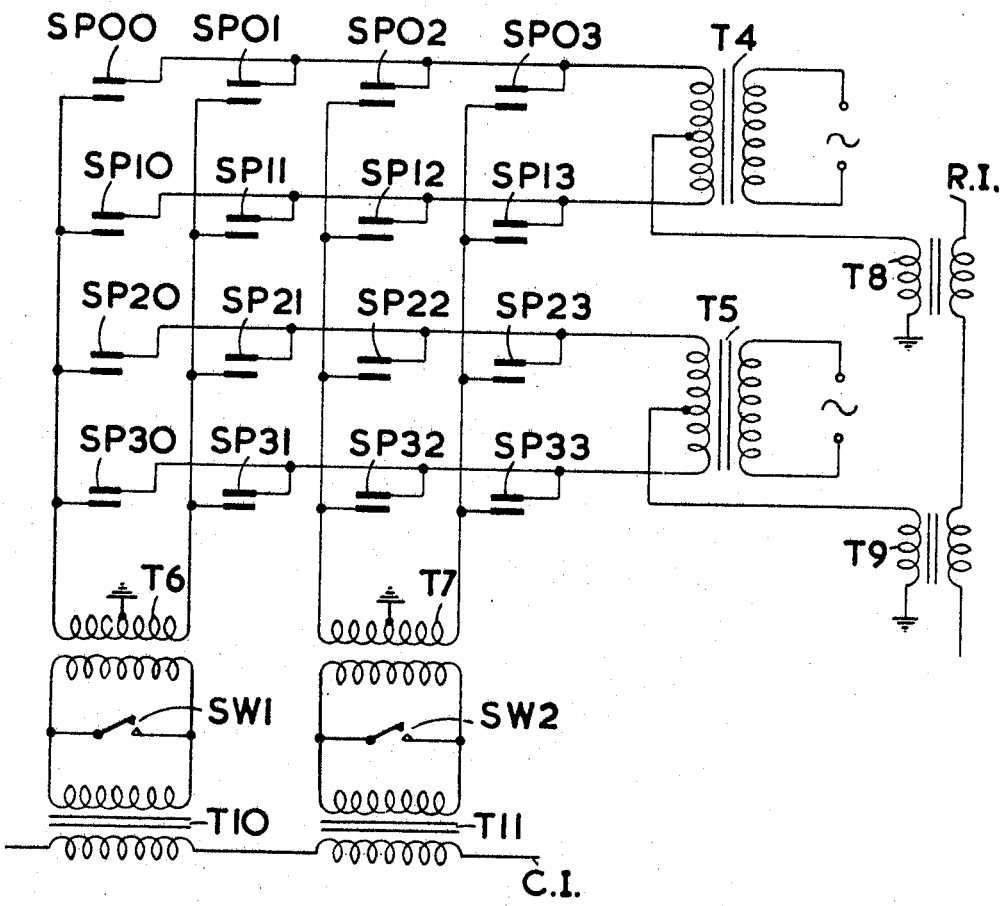

FIG. 4

Inventor
ERIC ARTHUR JOHNSON
By
Cushman, Darby & Cushman
Attorneys