April 19, 1966 H. L. MOSS 3,246,941

CONTACT LENS WITH UPPER CRESCENT SHAPED SCLERAL FLANGE AND HAVING VENT CHANNELS AND APERTURES

Filed Feb. 28, 1962

Fig. 1

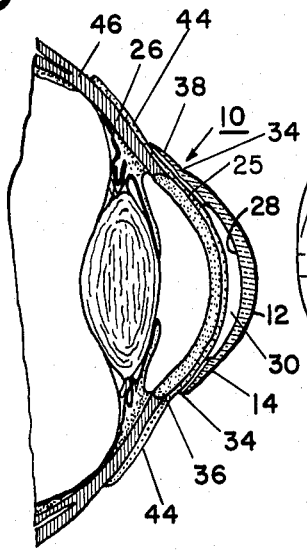

Fig. 2

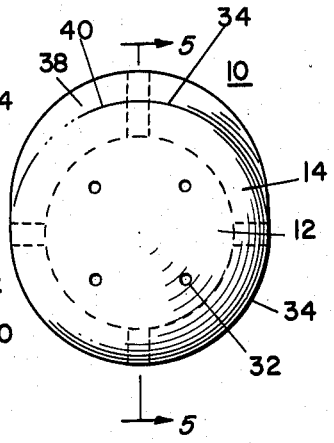

Fig. 3

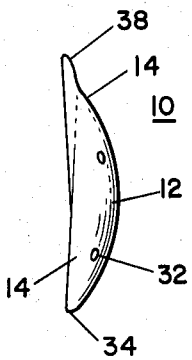

Fig. 4

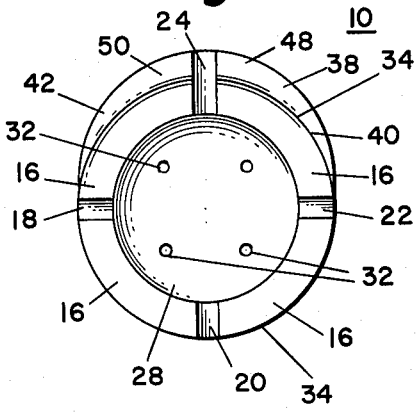

Fig. 5

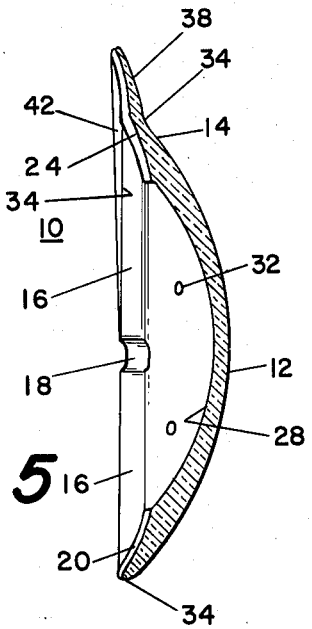

INVENTOR.
HERBERT L. MOSS
BY Jacob Trachtman
ATTORNEY