X-Y POSITION INDICATOR FOR A DISPLAY SYSTEM

Filed June 21, 1967 3 Sheets-Sheet 2

FIG. 4

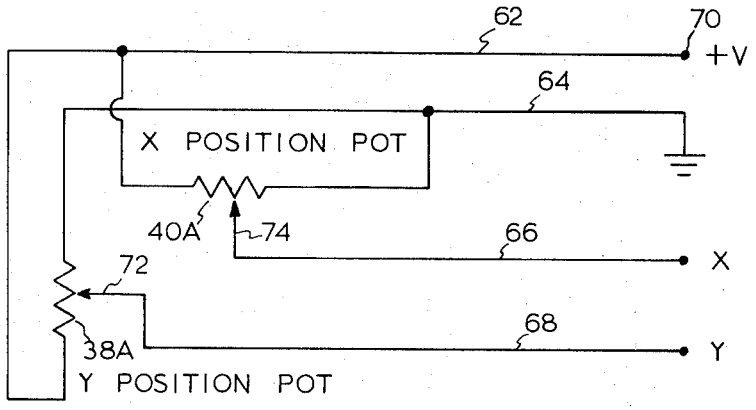

FIG. 5

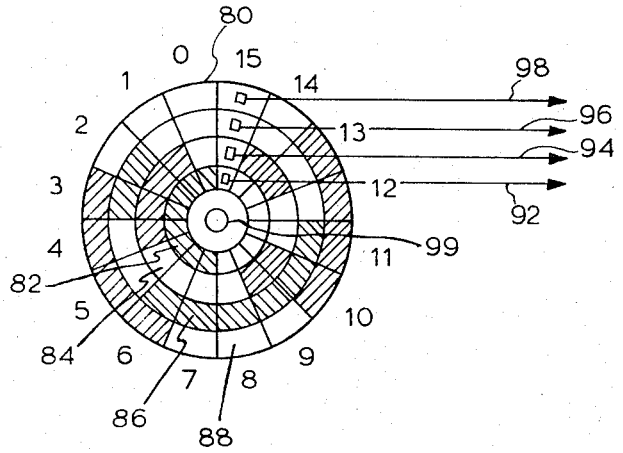

FIG. 6

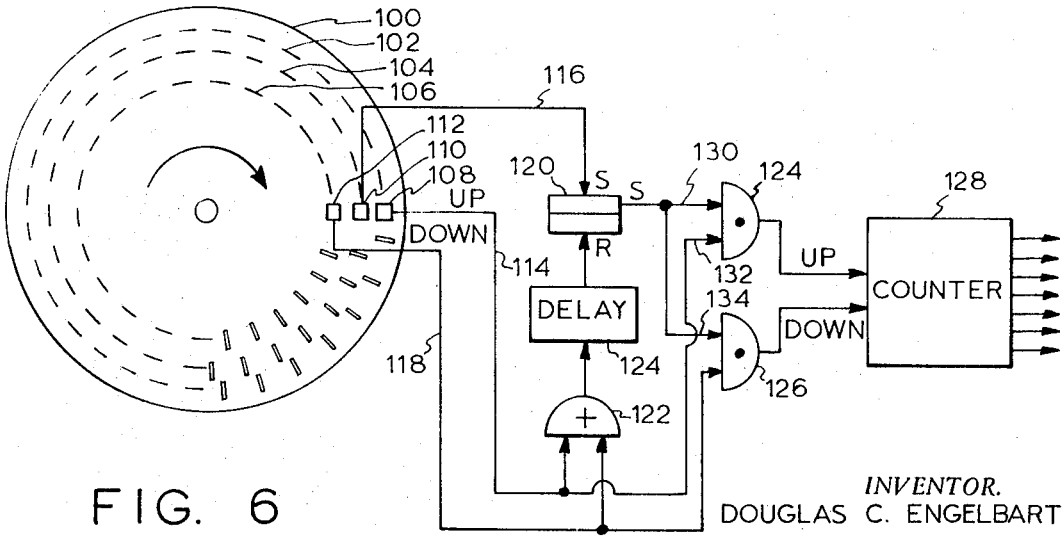

INVENTOR.
DOUGLAS C. ENGELBART

BY

Lindenberg + Freilich

ATTORNEYS