X-Y POSITION INDICATOR FOR A DISPLAY SYSTEM

Filed June 21, 1967 3 Sheets-Sheet 1

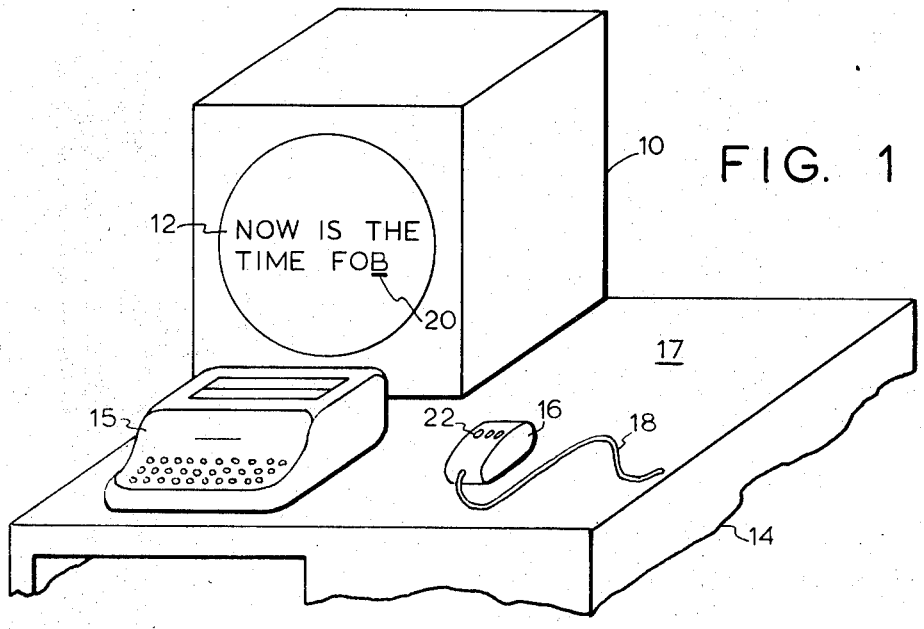

FIG. 1

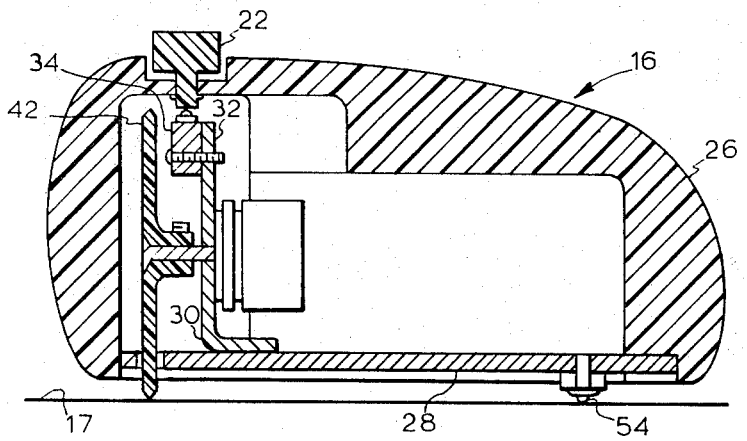

FIG. 2

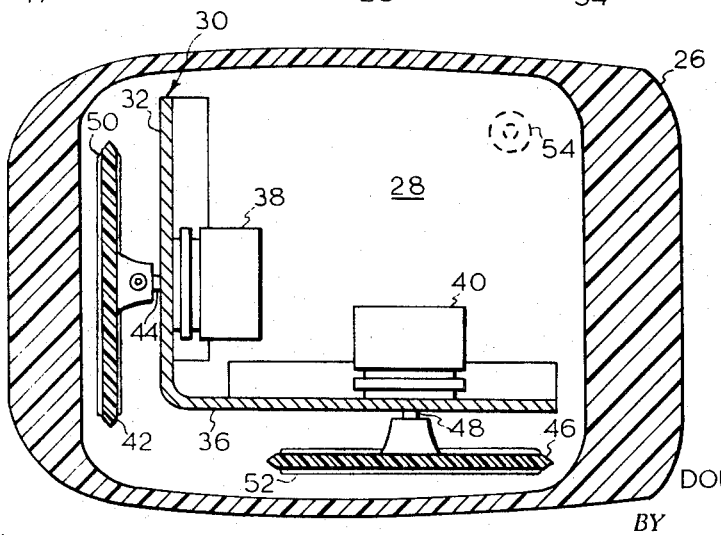

FIG. 3

INVENTOR.
DOUGLAS C. ENGELBART
BY
Lindenberg + Freilich
ATTORNEYS