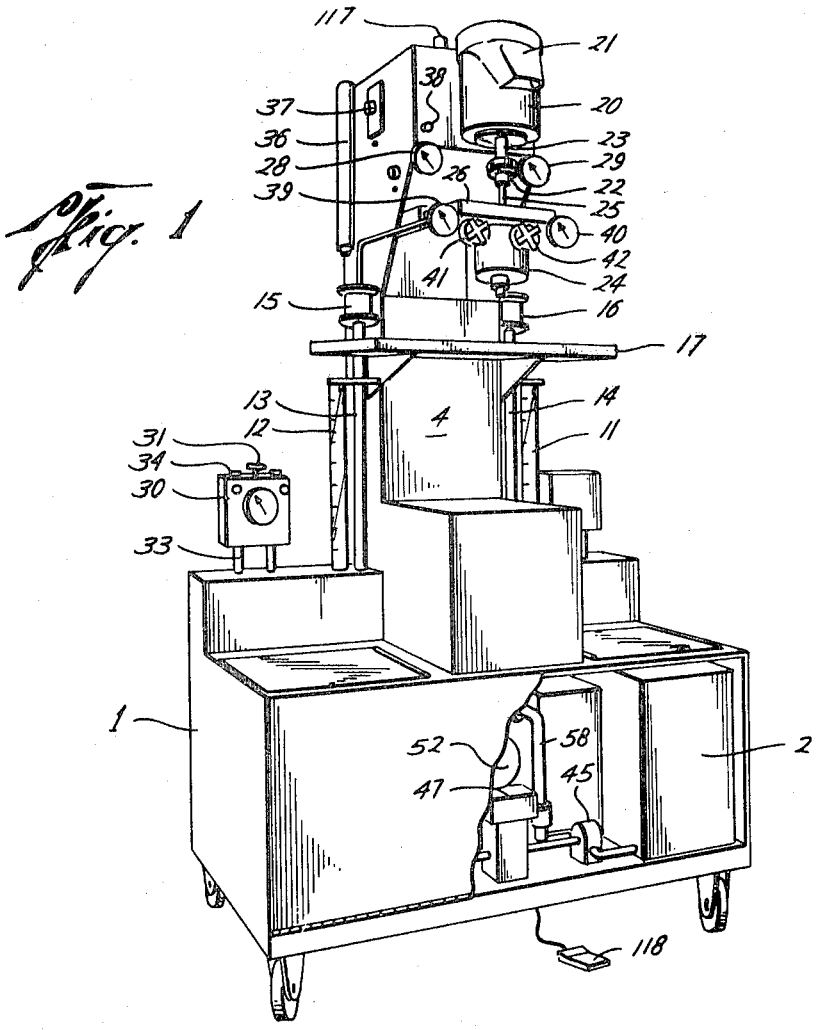

Fig. 1

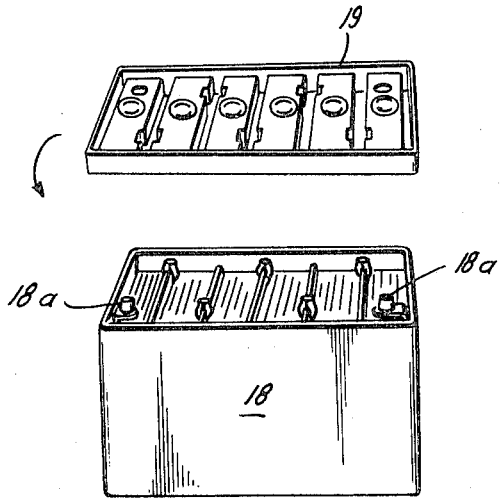

Fig. 2

William J. Eberle
INVENTOR.

BY Howard E. Moore
Gerald G. Crutsinger
ATTORNEYS