March 8, 1966 J. H. KLEIN ETAL 3,238,941

BALLING GUN

Filed June 19, 1963

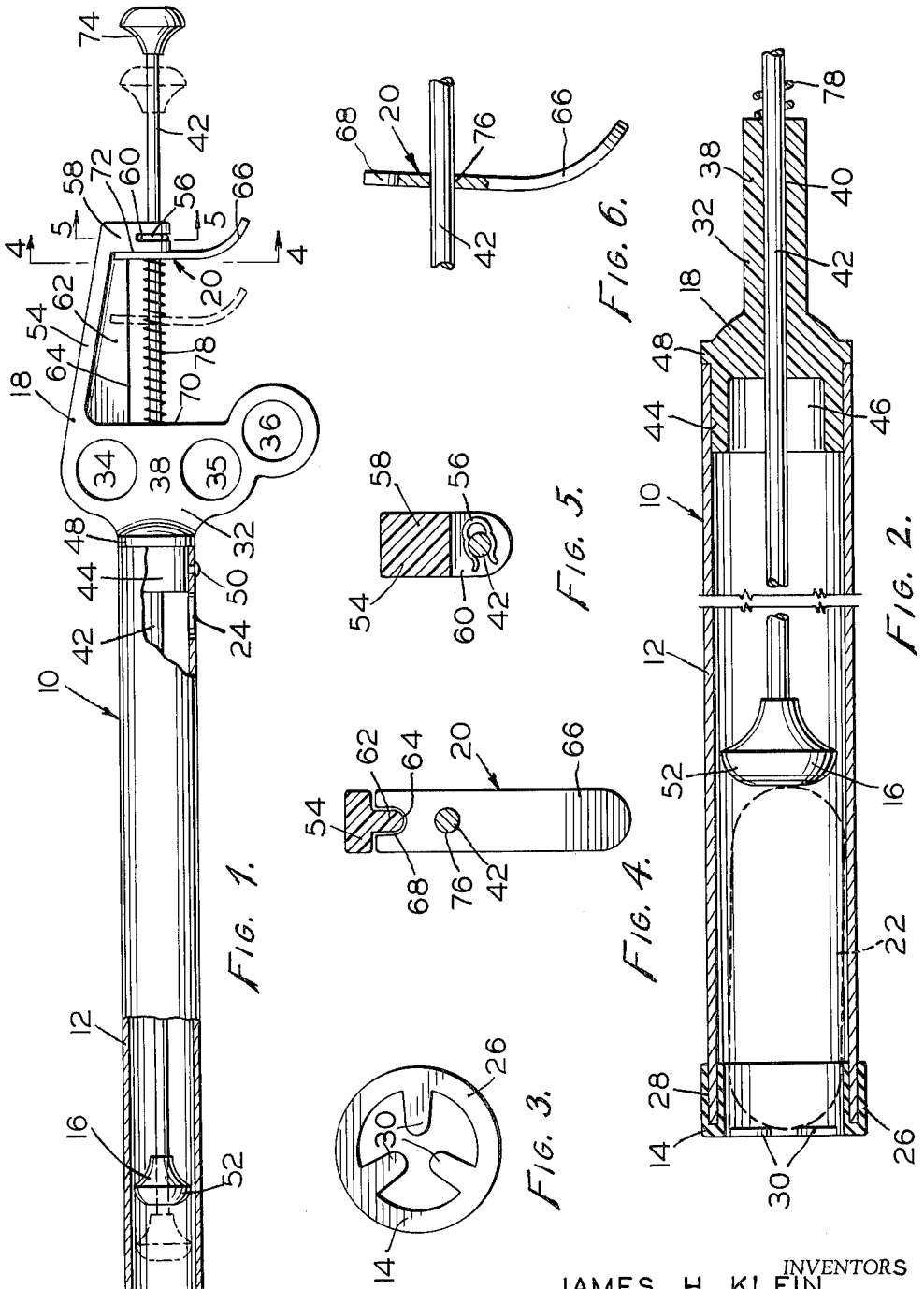

INVENTORS
JAMES H. KLEIN
FRANCIS I. TALLENTIRE
BY
Anderson, Spangler & Wymore
ATTORNEYS