US009638441B2

(12) **United States Patent**
Xu

(10) **Patent No.: US 9,638,441 B2**
(45) **Date of Patent: May 2, 2017**

(54) **CRYOGENIC REFRIGERATOR**

(71) Applicant: **SUMITOMO HEAVY INDUSTRIES, LTD.**, Tokyo (JP)

(72) Inventor: **Mingyao Xu**, Tokyo (JP)

(73) Assignee: **SUMITOMO HEAVY INDUSTRIES, LTD.**, Tokyo (JP)

(*) Notice: Subject to any disclaimer, the term of this patent is extended or adjusted under 35 U.S.C. 154(b) by 0 days.

(21) Appl. No.: **15/356,888**

(22) Filed: **Nov. 21, 2016**

(65) **Prior Publication Data**

US 2017/0067669 A1 Mar. 9, 2017

Related U.S. Application Data

(63) Continuation of application No. 13/611,400, filed on Sep. 12, 2012, now Pat. No. 9,534,813.

(30) **Foreign Application Priority Data**

Sep. 26, 2011 (JP) 2011-209937

(51) **Int. Cl.**
F25B 9/14 (2006.01)
F01B 9/02 (2006.01)

(52) **U.S. Cl.**
CPC ***F25B 9/14*** (2013.01); ***F01B 9/023*** (2013.01); *F25B 2309/1406* (2013.01)

(58) **Field of Classification Search**
CPC F25B 9/14; F25B 19/14; F25B 2309/003; F25B 2309/006; F01B 9/023; F01B 9/026
See application file for complete search history.

(56) **References Cited**

U.S. PATENT DOCUMENTS

4,791,898 A		12/1988	Jayne	
5,156,121 A	*	10/1992	Routery	F01B 9/02 123/197.3
5,361,588 A		11/1994	Asami et al.	
5,398,512 A	*	3/1995	Inaguchi	F25B 9/14 60/520
2012/0019005 A1	*	1/2012	Wilkins	F01B 9/023 290/1 A

FOREIGN PATENT DOCUMENTS

JP	H06-101917	4/1994
JP	2617681	6/1997
JP	H10-122682	5/1998

* cited by examiner

Primary Examiner — Frantz Jules
Assistant Examiner — Brian King
(74) *Attorney, Agent, or Firm* — IPUSA, PLLC

(57) **ABSTRACT**

A cryogenic refrigerator includes a Scotch yoke mechanism including a Scotch yoke and a bearing movably engaged with the Scotch yoke, and a displacer caused to reciprocate in a cylinder by the Scotch yoke mechanism, so that a refrigerant gas inside an expansion space formed in the cylinder is expanded by the reciprocation of the displacer to generate cold temperatures. The Scotch yoke includes a concave part at a position corresponding to a top dead center of the displacer.
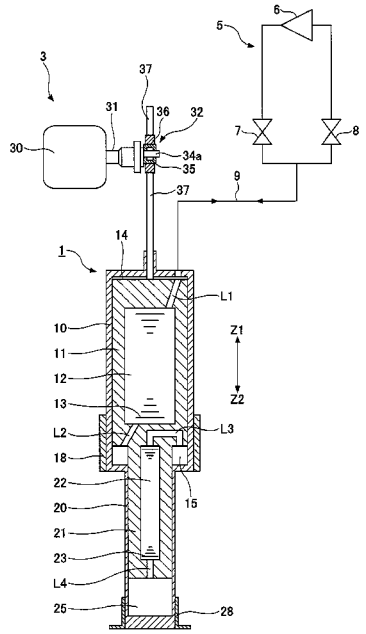
10 Claims, 8 Drawing Sheets