US009636741B2

(12) **United States Patent**
Mehta

(10) **Patent No.: US 9,636,741 B2**
(45) **Date of Patent: May 2, 2017**

(54) **SOLENOID HOUSING AND METHOD OF PROVIDING A SOLENOID HOUSING**

(75) Inventor: **Shreyas R. Mehta**, White Plains, NY (US)

(73) Assignee: **Indimet, Inc.**, White Plains, NY (US)

(*) Notice: Subject to any disclaimer, the term of this patent is extended or adjusted under 35 U.S.C. 154(b) by 1229 days.

(21) Appl. No.: **13/568,758**

(22) Filed: **Aug. 7, 2012**

(65) **Prior Publication Data**

US 2012/0299673 A1 Nov. 29, 2012

Related U.S. Application Data

(63) Continuation-in-part of application No. 12/102,392, filed on Apr. 14, 2008, now Pat. No. 8,261,592.

(60) Provisional application No. 60/989,649, filed on Nov. 21, 2007.

(51) **Int. Cl.**

B21K 1/24	(2006.01)
B21J 5/06	(2006.01)
B21D 51/16	(2006.01)
B21D 51/10	(2006.01)
B21K 1/26	(2006.01)

(52) **U.S. Cl.**

CPC ***B21K 1/24*** (2013.01); ***B21D 51/10*** (2013.01); ***B21D 51/16*** (2013.01); ***B21J 5/06*** (2013.01); ***B21K 1/26*** (2013.01)

(58) **Field of Classification Search**

CPC ... B21K 1/24; B21K 1/26; B21K 1/28; B21K 21/02; B21D 51/16; B21D 51/10; B21J 1/04; B21J 5/06; B21J 5/08; B21J 5/02; B21J 5/00

See application file for complete search history.

(56) **References Cited**

U.S. PATENT DOCUMENTS

4,871,989	A *	10/1989	Gross	H01F 7/1607 251/129.03
5,546,987	A *	8/1996	Sule	F16K 31/0658 137/625.5
5,771,737	A *	6/1998	Yaegashi	B21C 37/202 72/356
6,688,148	B1 *	2/2004	Hartzell	B21J 1/06 148/599
2006/0266657	A1 *	11/2006	Berkovich	C25F 3/26 205/674
2007/0006628	A1 *	1/2007	Tabei	B21J 5/06 72/348
2007/0184697	A1 *	8/2007	Taguchi	F04B 27/1804 439/218
2009/0205393	A1 *	8/2009	Mehta	B21D 51/02 72/370.12
2012/0073278	A1 *	3/2012	Brees	F16D 41/067 60/345

FOREIGN PATENT DOCUMENTS

GB	976861	* 12/1964
JP	WO 2005/099929	* 11/2005

* cited by examiner

Primary Examiner — Moshe Wilensky
Assistant Examiner — Mohammad Yusuf
(74) *Attorney, Agent, or Firm* — IP Attorneys Group, LLC

(57) **ABSTRACT**

This invention relates to a solenoid housing and to a method for providing a solenoid housing having the base, wall, center pole, and flange integrally connected as a single piece. The instant invention provides for mounting protrusions and window for electrical leads as an integral part of the housing and manufacturing process.
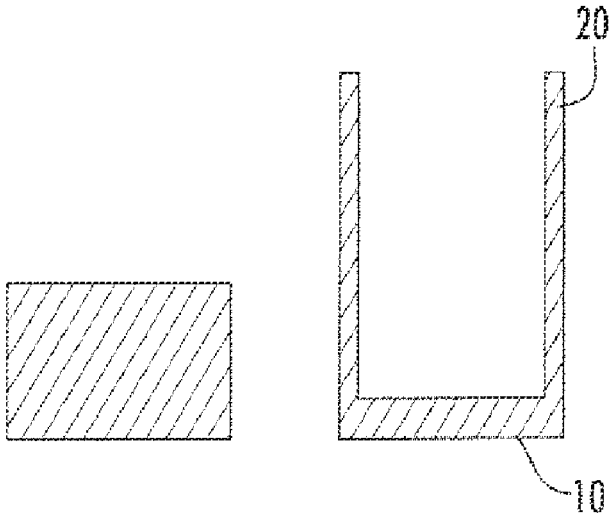
17 Claims, 7 Drawing Sheets