US009636241B2

(12) **United States Patent**
Su

(10) **Patent No.: US 9,636,241 B2**
(45) **Date of Patent: May 2, 2017**

(54) **COIL BIOABSORBABLE STENTS**

(75) Inventor: **Shih-Horng Su**, Irvine, CA (US)

(73) Assignee: **MANLI INTERNATIONAL LTD** (VG)

(*) Notice: Subject to any disclaimer, the term of this patent is extended or adjusted under 35 U.S.C. 154(b) by 355 days.

(21) Appl. No.: **13/587,219**

(22) Filed: **Aug. 16, 2012**

(65) **Prior Publication Data**

US 2013/0261733 A1 Oct. 3, 2013

Related U.S. Application Data

(63) Continuation-in-part of application No. 13/435,487, filed on Mar. 30, 2012, now Pat. No. 8,834,915, and (Continued)

(51) **Int. Cl.**
A61F 2/82 (2013.01)
A61F 2/88 (2006.01)
(Continued)

(52) **U.S. Cl.**
CPC ***A61F 2/88*** (2013.01); ***A61F 2/885*** (2013.01); *A61F 2/954* (2013.01); *A61F 2002/061* (2013.01); *A61F 2002/825* (2013.01); *A61F 2210/0004* (2013.01); *A61F 2230/0067* (2013.01); *A61F 2230/0091* (2013.01); *A61F 2250/0029* (2013.01);
(Continued)

(58) **Field of Classification Search**
CPC .. A61F 2002/30121; A61F 2002/30123; A61F 2/88; A61F 2/885; A61F 2230/0091
USPC 623/1.22, 1.27, 1.3, 1.31, 1.17
See application file for complete search history.

(56) **References Cited**

U.S. PATENT DOCUMENTS

5,133,732 A * 7/1992 Wiktor A61F 2/88 604/104
5,582,619 A * 12/1996 Ken 606/191
(Continued)

FOREIGN PATENT DOCUMENTS

WO 2008-051579 5/2008

OTHER PUBLICATIONS

European Patent Office, Extended Search Report, EP Appln. No. 12195835, Feb. 13, 2013, 1 page.

Primary Examiner — Christian Sevilla
Assistant Examiner — Cheryl Miller
(74) *Attorney, Agent, or Firm* — Fish & Tsang, LLP

(57) **ABSTRACT**

An expandable, bioabsorbable stent having a coiled-coil configuration is described. The stent further comprises regions of variable pitch that allow for variation in either rigidity, or variability diameter within sub-regions along the length of the deployed stent. By varying the diameter allows the stent to extend into regions such as branched vessels, or into the neck of aneurysms. In some embodiments, the stent comprises longitudinal support fibers that run substantially the length of the deployed stent to provide additional strength. In addition, the stent may also comprise regional support fibers that run less than the length of the stent, and which provide increased regional strength while permitting flexibility of the stent. The stent further comprises micro-tubes that are configured to be visible using medical imaging techniques. The stent can be manufactured from materials that are bioabsorbable and/or include the ability to release pharmacologically active substances over time.
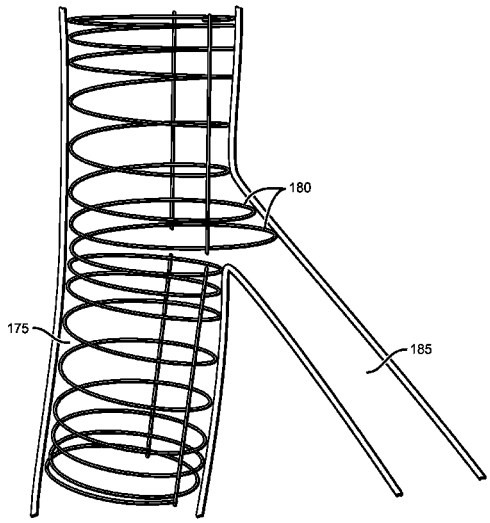
15 Claims, 3 Drawing Sheets