April 5, 1927. 1,623,641

E. C. SIXTA

STRUCTURE BUILDING CARD

Filed June 22, 1926

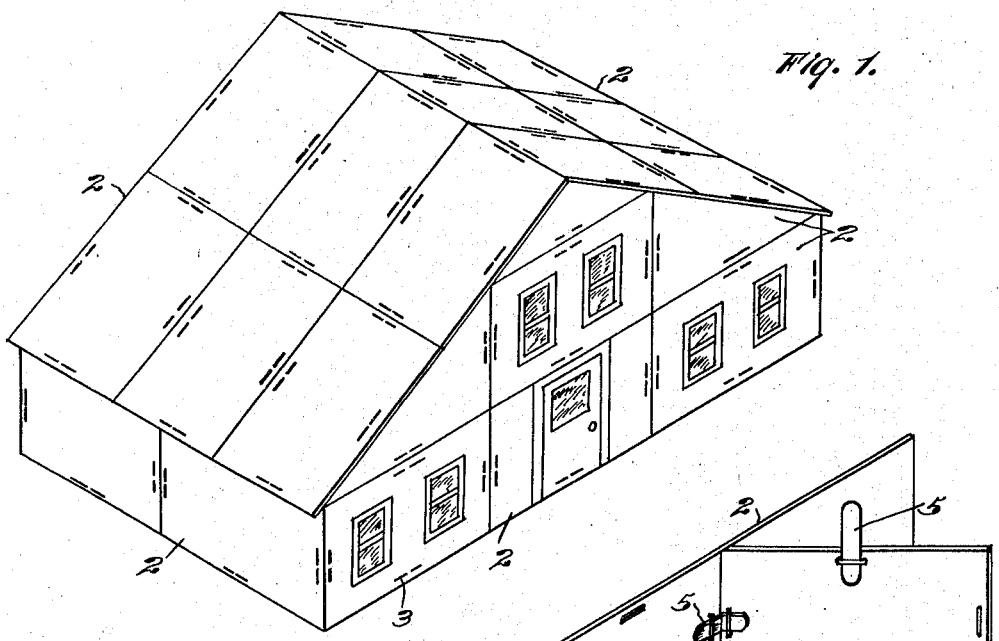

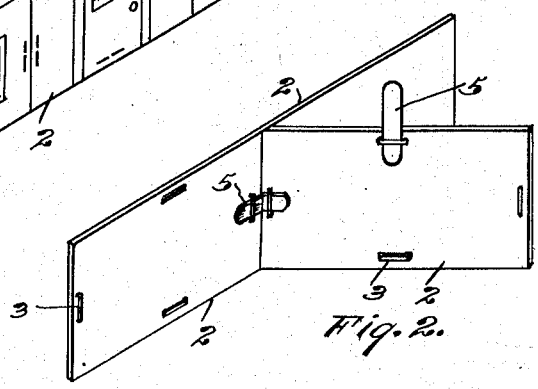

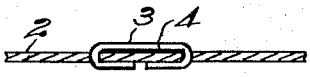

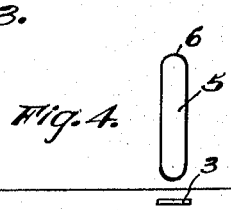

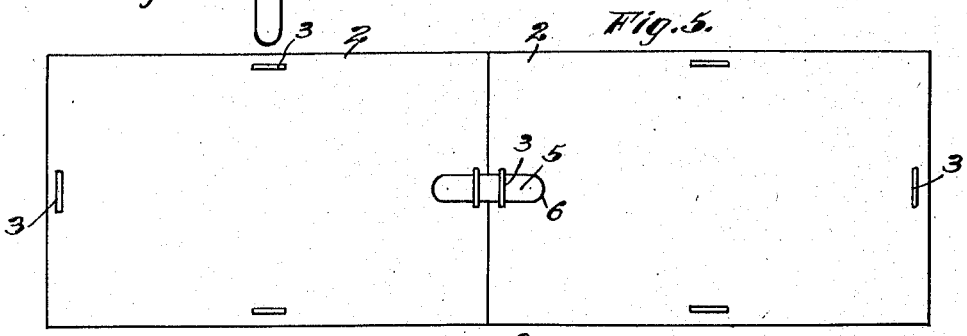

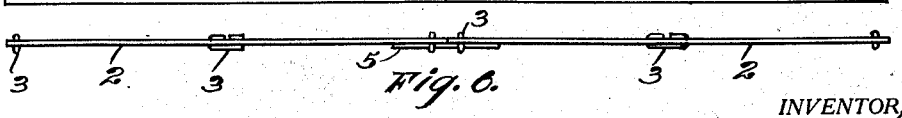

INVENTOR,
Emil C. Sixta,
BY
G. E. Maynard,
ATTORNEY.