Dec. 9, 1952 S. A. OBITZ 2,621,141

METHOD OF COVERING AN IRONING ROLL

Filed April 19, 1949 2 SHEETS—SHEET 2

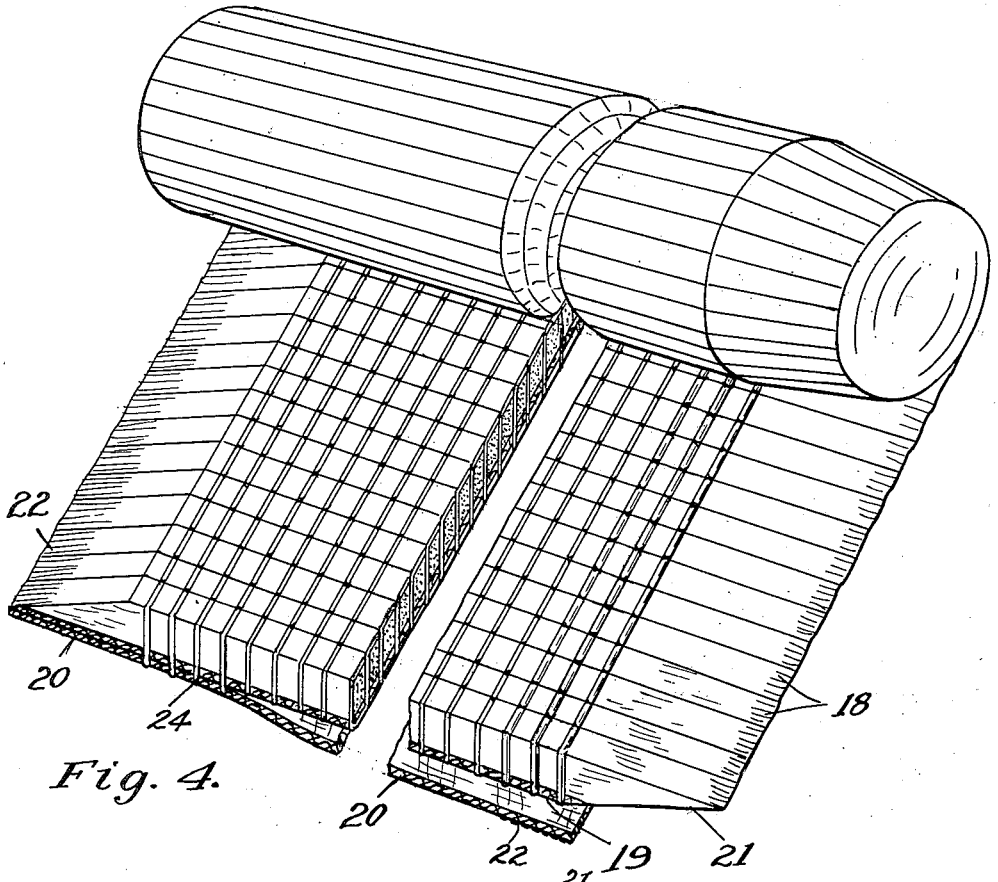

Fig. 4.

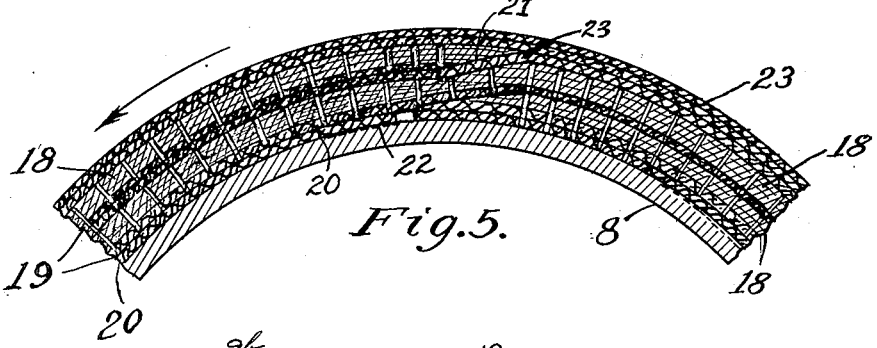

Fig. 5.

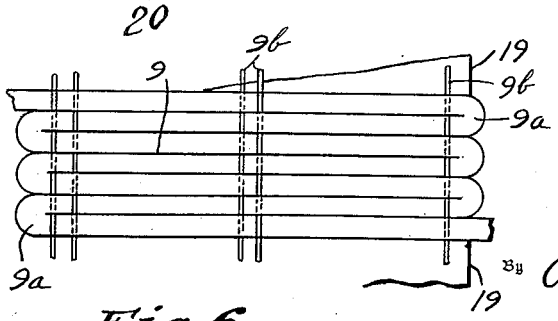

Fig. 6.

Inventor
Samuel A. Obitz
By Cushman Martin
Attorney