Aug. 25, 1931. H. E. SOREF 1,820,841

DISPLAY STAND

Filed Sept. 29, 1927

Fig. 1.

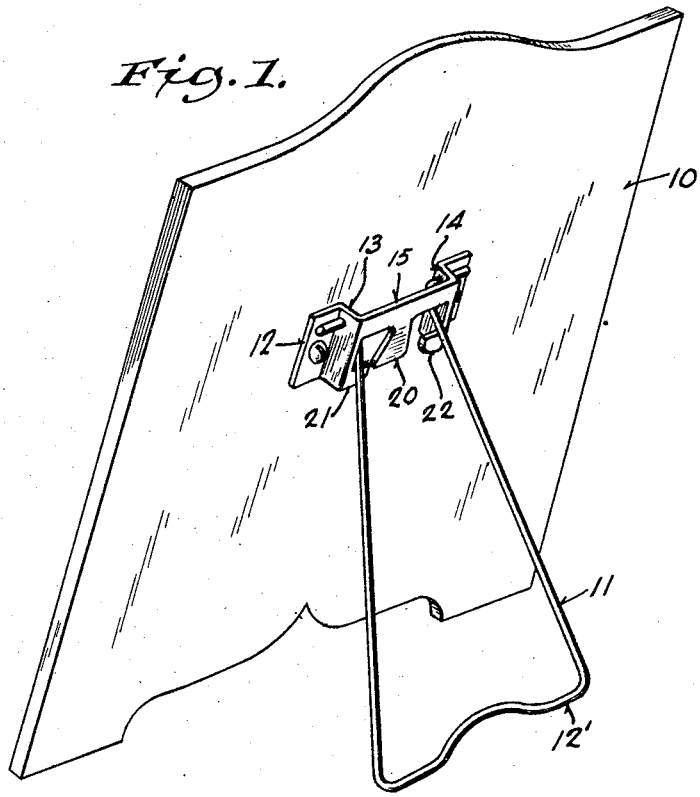

Fig. 2.

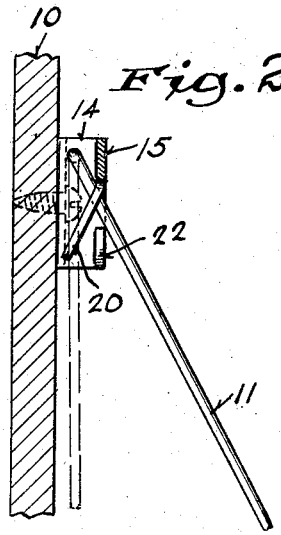

Fig. 3.

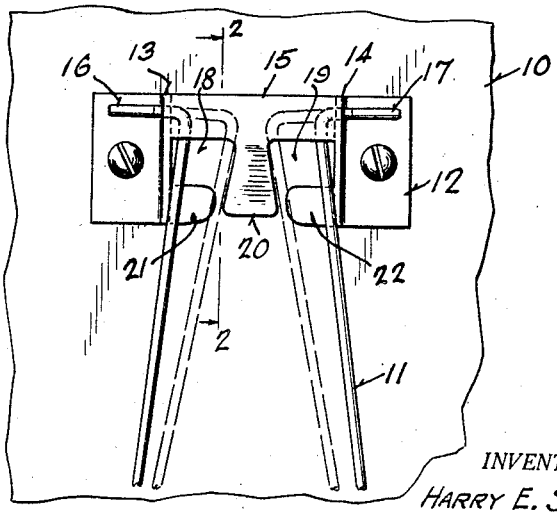

WITNESS:
Floyd Palm
DEL.

INVENTOR.
HARRY E. SOREF

BY
Greene, Wheeler & Woolard
ATTORNEYS.