US007214941B2

(12) **United States Patent**
Hamelin et al.

(10) **Patent No.: US 7,214,941 B2**
(45) **Date of Patent: May 8, 2007**

(54) **CRACK DETECTION IN RAZOR BLADES**

(75) Inventors: **Michel Hamelin**, West Roxbury, MA (US); **William Masek**, North Attleboro, MA (US); **Joseph A. Depuydt**, Quincy, MA (US)

(73) Assignee: **The Gillette Company**, Boston, MA (US)

(*) Notice: Subject to any disclaimer, the term of this patent is extended or adjusted under 35 U.S.C. 154(b) by 249 days.

(21) Appl. No.: **11/014,366**

(22) Filed: **Dec. 16, 2004**

(65) **Prior Publication Data**

US 2006/0192123 A1 Aug. 31, 2006

(51) **Int. Cl.**
G01J 5/02 (2006.01)

(52) **U.S. Cl.** **250/341.1**

(58) **Field of Classification Search** 250/341.1
See application file for complete search history.

(56) **References Cited**

U.S. PATENT DOCUMENTS

1,897,141 A * 2/1933 Peters 324/71.1
2,073,832 A * 3/1937 Godfrey 209/702
2,124,579 A 7/1938 Knerr et al.
2,855,564 A 10/1958 Irwin et al.
3,538,433 A 11/1970 Wood et al.
3,619,770 A 11/1971 Forster
3,693,075 A 9/1972 Forster
3,753,085 A 8/1973 Morton et al.
3,875,502 A 4/1975 Neumaier
4,325,026 A 4/1982 Cooper, Jr. et al.
4,598,206 A 7/1986 Nelson
4,659,991 A 4/1987 Weischedel
4,673,879 A 6/1987 Harris et al.
4,806,894 A 2/1989 Koto
5,041,786 A 8/1991 Takaishi et al.
5,066,891 A 11/1991 Harrold et al.
5,069,005 A * 12/1991 Hovland et al. 451/53
5,111,048 A 5/1992 Devitt et al.
5,311,127 A 5/1994 Bisiaux
5,424,640 A 6/1995 Levy
5,451,872 A 9/1995 Antonine et al.
5,621,323 A * 4/1997 Larsen 324/318
5,638,000 A 6/1997 Forster
5,669,156 A 9/1997 Vejchoda
5,793,205 A 8/1998 Griffith et al.

(Continued)

FOREIGN PATENT DOCUMENTS

DE 199 51 172 A1 4/1975

(Continued)

OTHER PUBLICATIONS

XP008061570, Oct. 30, 1930, H. R. Simonds.

(Continued)

Primary Examiner—David Porta
Assistant Examiner—Christine Sung
(74) *Attorney, Agent, or Firm*—Fish & Richardson P.C.

(57) **ABSTRACT**

Methods are provided for determining the presence of cracks in razor blades during manufacturing. The methods may include, for example, providing a plurality of razor blades in a stack, inducing a current in the stack, and measuring a parameter that is related to the current and indicative of the presence or absence of cracks in the razor blades.
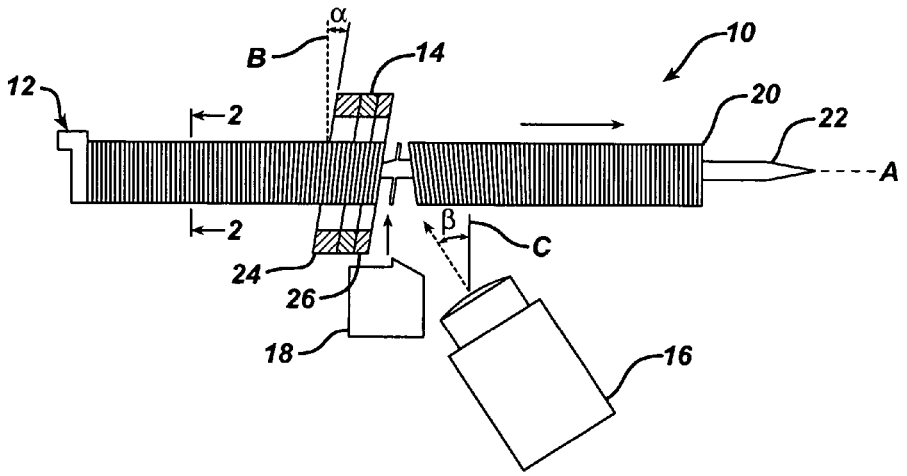
25 Claims, 3 Drawing Sheets