United States Patent [19]

Nagashima et al.

[11] **Patent Number: 4,814,241**

[45] **Date of Patent: Mar. 21, 1989**

[54] **ELECTROLYTES FOR REDOX FLOW BATTERIES**

[75] Inventors: **Ikuo Nagashima**, Kobe; **Jun Fukui**, Sakae; **Hiroshi Gotoh**, Tokyo; **Hiroko Kaneko**, Sakura; **Ken Nozaki**, Sakura; **Takeo Ozawa**, Sakura, all of Japan

[73] Assignees: **Director-General, Agency of Industrial Science and Technology; Kawasaki Jukogyo Kabushiki Kaisha**, Tokyo, Japan

[21] Appl. No.: **25,990**

[22] Filed: **Mar. 16, 1987**

[30] **Foreign Application Priority Data**

Mar. 15, 1986 [JP] Japan 61-57915

[51] **Int. Cl.**[4] **H01M 8/08**

[52] **U.S. Cl.** **429/199**; 429/200; 429/202; 429/204; 429/15; 429/21

[58] **Field of Search** 429/199, 200, 202–204, 429/107, 109, 15, 21

[56] **References Cited**

U.S. PATENT DOCUMENTS

4,362,791 12/1982 Kaneko et al. 429/101
4,469,760 9/1984 Giner et al. 429/21
4,550,065 10/1985 Fujii et al. 429/105

OTHER PUBLICATIONS

Gahn et al., IECEC No. 839269 (Proc. International Energy Conversion Conf., p. 1647 (1983).

Primary Examiner—Aaron Weisstuch
Attorney, Agent, or Firm—Wenderoth, Lind & Ponack

[57] **ABSTRACT**

An electrolyte for a Redox flow battery contains from 1 to 4 normal hydrochloric acid and at least 0.5 mole/liter of an active material, and further contains from 0.1 to 4 normalities of an acid comprising an anion which does not inhibit the electrode reactions in addition to the hydrochloric acid. This electrolyte reduces the cell resistivity and improves the solubility of active materials.
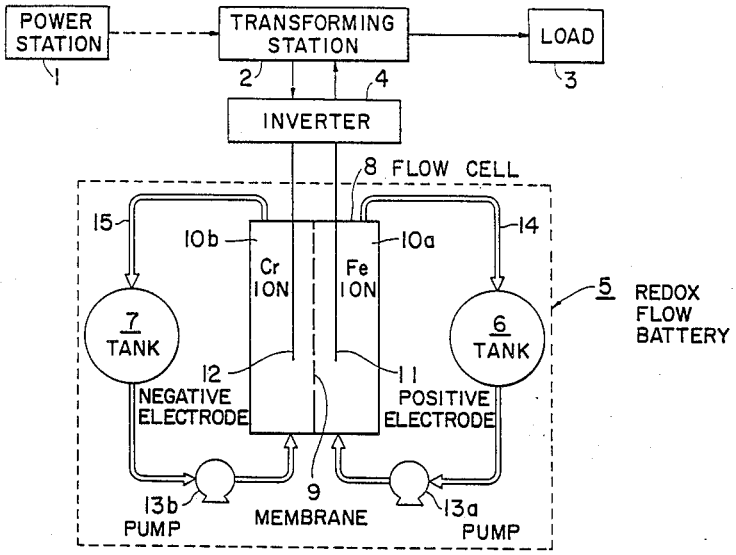
2 Claims, 4 Drawing Sheets