US009411341B2

(12) **United States Patent**
Lee et al.

(10) **Patent No.: US 9,411,341 B2**
(45) **Date of Patent: Aug. 9, 2016**

(54) **VACUUM PUMP CONTROLLER**

(71) Applicant: **GLOBALFOUNDRIES Singapore Pte. Ltd.**, Singapore (SG)

(72) Inventors: **Chin Fong Lee**, Singapore (SG); **Ming Zhu**, Singapore (SG); **Chuin Boon Yeap**, Singapore (SG)

(*) Notice: Subject to any disclaimer, the term of this patent is extended or adjusted under 35 U.S.C. 154(b) by 382 days.

(21) Appl. No.: **13/900,542**

(22) Filed: **May 23, 2013**

(65) **Prior Publication Data**

US 2013/0317640 A1 Nov. 28, 2013

Related U.S. Application Data

(60) Provisional application No. 61/651,534, filed on May 24, 2012.

(51) **Int. Cl.**

G05D 7/00	(2006.01)
G05D 7/06	(2006.01)
F04D 19/04	(2006.01)
F04D 27/02	(2006.01)
H01L 21/67	(2006.01)

(52) **U.S. Cl.**

CPC ***G05D 7/0617*** (2013.01); ***F04D 19/04*** (2013.01); ***F04D 27/02*** (2013.01); *H01L 21/67259* (2013.01); *H01L 21/67276* (2013.01)

(58) **Field of Classification Search**

CPC H01L 21/67201; H01L 21/67276; H01L 21/6773; H01L 21/28202; G05B 2219/45031

See application file for complete search history.

(56) **References Cited**

U.S. PATENT DOCUMENTS

6,591,851	B1 *	7/2003	Palten	F04D 19/04 137/12
8,874,274	B2 *	10/2014	McDonald	H04L 12/403 62/55.5
2004/0013531	A1 *	1/2004	Curry	F04D 27/0261 417/42
2007/0107598	A1 *	5/2007	Lee	H01L 21/67196 96/74
2008/0273995	A1 *	11/2008	Bailey	F04D 27/0292 417/279
2009/0216061	A1 *	8/2009	Clark et al.	B01D 53/005 588/313
2010/0106992	A1 *	4/2010	Schauer	G05B 19/41865 713/323
2010/0190343	A1 *	7/2010	Aggarwal	C30B 25/16 438/694
2011/0220342	A1 *	9/2011	Page	G05D 23/1917 165/279
2012/0090338	A1 *	4/2012	Czerniak	B01D 53/79 62/91

* cited by examiner

Primary Examiner — Darrin Dunn
(74) *Attorney, Agent, or Firm* — Horizon IP Pte. Ltd.

(57) **ABSTRACT**

A vacuum pump controller and a method of making a devise using the same are presented. The vacuum pump controller comprises detectors for detecting whether a cassette is present in a semiconductor processing load lock; and controllers for sending control signals to a vacuum pump to control the speed voltage of the vacuum pump. The vacuum pump controller may further send control signals to control the supply of N_2/H_2 gas, cooling water and other vacuum pump accessories.
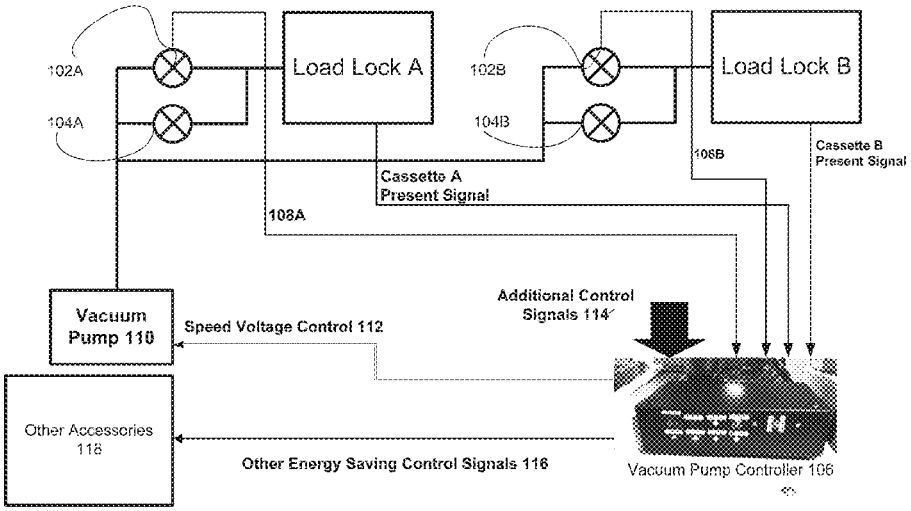
20 Claims, 4 Drawing Sheets