US009410941B2

(12) **United States Patent**
**Caimmi et al.**

(10) **Patent No.: US 9,410,941 B2**
(45) **Date of Patent: Aug. 9, 2016**

(54) **COMPOSITION FOR THE DETECTION OF ALCOHOL VAPORS IN AN AIR SAMPLE**

(71) Applicant: **Pietro Caimmi**, Bastia Umbra (Perugia) (IT)

(72) Inventors: **Pietro Caimmi**, Bastia Umbra (IT); **Marco Marchetti**, Montefiore Dell'Aso (IT); **Norberto Roveri**, Bologna (IT); **Rocco Mercuri**, Bevagna (IT); **Eros D'Amen**, Bologna (IT)

(73) Assignee: **CAIMMI, PIETRO**, Bastia Umbra (IT)

( * ) Notice: Subject to any disclaimer, the term of this patent is extended or adjusted under 35 U.S.C. 154(b) by 0 days.

(21) Appl. No.: **14/782,680**

(22) PCT Filed: **Apr. 8, 2013**

(86) PCT No.: **PCT/IT2013/000100**

§ 371 (c)(1),
(2) Date: **Oct. 6, 2015**

(87) PCT Pub. No.: **WO2014/167586**

PCT Pub. Date: **Oct. 16, 2014**

(65) **Prior Publication Data**

US 2016/0041147 A1 Feb. 11, 2016

(51) **Int. Cl.**

| | |
|---|---|
| ***G01N 33/497*** | (2006.01) |
| ***G01N 33/00*** | (2006.01) |
| ***G01N 31/22*** | (2006.01) |
| ***G01N 33/98*** | (2006.01) |
| ***A61B 5/087*** | (2006.01) |
| ***G01N 21/78*** | (2006.01) |
| ***G01N 33/52*** | (2006.01) |
| *G01N 21/77* | (2006.01) |
| *A61B 5/08* | (2006.01) |
| *A61B 5/097* | (2006.01) |

(Continued)

(52) **U.S. Cl.**

CPC ..... ***G01N 33/4972*** (2013.01); ***G01N 21/783*** (2013.01); ***G01N 31/223*** (2013.01); ***G01N 33/0047*** (2013.01); ***G01N 33/52*** (2013.01); ***G01N 33/98*** (2013.01); *A61B 5/0452* (2013.01); *A61B 5/082* (2013.01); *A61B 5/097* (2013.01); *A61B 5/4845* (2013.01); *A61K 31/205* (2013.01); *G01N 21/77* (2013.01); *G01N 27/4045* (2013.01); *G01N 31/22* (2013.01); *G01N 2800/307* (2013.01)

(58) **Field of Classification Search**

CPC ..... G01N 33/98; G01N 21/77; G01N 31/22; G01N 31/223; G01N 21/78; G01N 21/783; G01N 27/4045; G01N 2800/307; G01N 33/497; G01N 33/4972; Y10S 436/90; A61B 5/097; A61K 31/205

See application file for complete search history.

(56) **References Cited**

U.S. PATENT DOCUMENTS

4,105,409 A * 8/1978 Monnier ..... G01N 33/98 436/132
4,492,673 A * 1/1985 Eriksen ..... G01N 33/98 422/85

(Continued)

FOREIGN PATENT DOCUMENTS

GB 1 168 529 A 10/1969
GB 1 516 295 A 7/1978

(Continued)

*Primary Examiner* — Jennifer Wecker
(74) *Attorney, Agent, or Firm* — Pearne & Gordon LLP

(57) **ABSTRACT**

The present invention relates to a silica gel-based composition capable of changing color when placed in contact with alcohol vapors. Said composition is particularly useful for preparing devices for the detection of alcohol, for example devices for carrying out an alcohol test on samples of air exhaled by individuals when subjected to checks by the police or competent authorities.
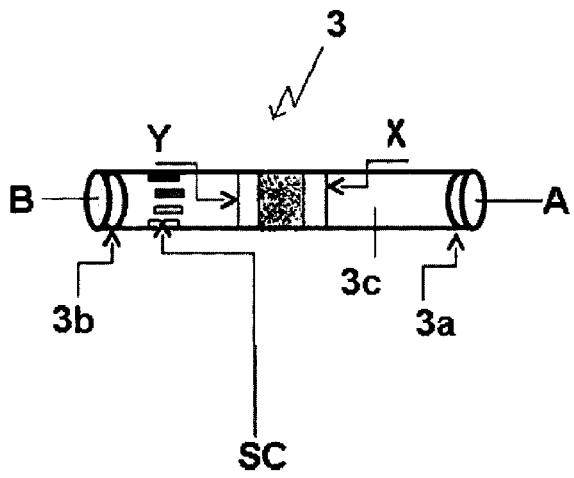
**8 Claims, 2 Drawing Sheets**