US009410841B2

(12) **United States Patent**
Collins, Jr. et al.

(10) **Patent No.: US 9,410,841 B2**
(45) **Date of Patent: Aug. 9, 2016**

(54) **INTEGRATED SCANNER, SCALE, AND TOUCHSCREEN DISPLAY**

(75) Inventors: **Donald A. Collins, Jr.**, Buford, GA (US); **Peter B. Barron**, Tucker, GA (US); **Graeme Smith**, Dundee (GB)

(73) Assignee: **NCR Corporation**, Duluth, GA (US)

(*) Notice: Subject to any disclaimer, the term of this patent is extended or adjusted under 35 U.S.C. 154(b) by 158 days.

(21) Appl. No.: **13/435,430**

(22) Filed: **Mar. 30, 2012**

(65) **Prior Publication Data**

US 2013/0256041 A1 Oct. 3, 2013

(51) **Int. Cl.**

G01G 19/40	(2006.01)
G01G 19/414	(2006.01)
G01G 23/36	(2006.01)
G07G 1/00	(2006.01)
G07G 1/12	(2006.01)
A47F 9/04	(2006.01)

(52) **U.S. Cl.**

CPC ***G01G 19/4144*** (2013.01); ***G07G 1/0045*** (2013.01); ***G07G 1/12*** (2013.01); *A47F 9/047* (2013.01)

(58) **Field of Classification Search**

CPC ... G01G 21/28; G01G 19/52; G01G 19/4144; G06K 7/10544; G06K 15/00; G06Q 30/0641; G06Q 30/0643; G06Q 50/10; G06Q 50/12; G06Q 20/208; G06Q 20/20; G07G 1/0072; G07G 1/12; G07G 1/0045; G07G 1/0054; G06F 3/01; G06F 1/1684; G06F 3/0421; G06F 3/0425; G06F 2203/04105; G06F 1/16; G06F 3/042; A47F 9/047

USPC 177/25.11–25.15; 235/383; 702/173

See application file for complete search history.

(56) **References Cited**

U.S. PATENT DOCUMENTS

5,750,937	A *	5/1998	Johnson et al.	177/25.11
6,550,582	B2	4/2003	Addy et al.	
6,644,547	B1 *	11/2003	White	G06Q 20/04 235/381
7,186,930	B1 *	3/2007	Wong et al.	177/25.13
7,547,851	B1 *	6/2009	Wong	177/25.13
7,681,794	B2 *	3/2010	Leng	G06F 1/1616 235/454
7,681,795	B2	3/2010	Roquemore	
8,169,332	B2 *	5/2012	Son	340/665
8,448,859	B2 *	5/2013	Goncalves et al.	235/383
8,610,007	B2 *	12/2013	Chen	177/25.13
9,092,050	B2 *	7/2015	Amada	G06F 3/01
2002/0079168	A1	6/2002	Addy et al.	
2003/0120547	A1	6/2003	Walter et al.	

(Continued)

OTHER PUBLICATIONS

Office Action for European Patent Application No. 13156592.1-1557 dated Jul. 9, 2013.

(Continued)

Primary Examiner — Randy W Gibson

(74) *Attorney, Agent, or Firm* — Schwegman, Lundberg & Woessner

(57) **ABSTRACT**

An integrated scanner, scale and touchscreen display ("integrated touchscreen scanner") is addressed. In one alternative, the integrated touchscreen scanner further includes a printer for printing receipts, coupons and the like. The integrated touchscreen scanner is designed for flush mounting in a checkout or self-checkout stand. Keystrokes, icon selection and the like may be suitably sensed employing weigh cells in the scale of the integrated touchscreen scanner. Additionally, the display may be partitioned into a customer portion and a checker portion. This partitioning may be fixed or dynamically adjusted in response to the state of the transaction.
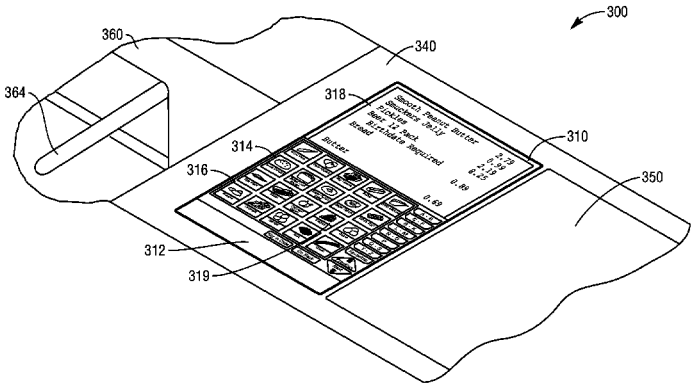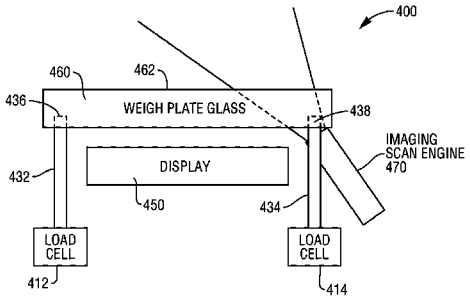
12 Claims, 9 Drawing Sheets