US009510641B1

(12) **United States Patent**
Skinner et al.

(10) **Patent No.: US 9,510,641 B1**
(45) **Date of Patent: Dec. 6, 2016**

(54) **WATERPROOF BOOT ASSEMBLY**

(71) Applicants: **Frank Skinner**, Gulfport, MS (US); **Dara Skinner**, Gulfport, MS (US)

(72) Inventors: **Frank Skinner**, Gulfport, MS (US); **Dara Skinner**, Gulfport, MS (US)

(*) Notice: Subject to any disclaimer, the term of this patent is extended or adjusted under 35 U.S.C. 154(b) by 475 days.

(21) Appl. No.: **14/028,155**

(22) Filed: **Sep. 16, 2013**

(51) **Int. Cl.**

A43B 5/00	(2006.01)
A43B 7/14	(2006.01)
A43B 23/07	(2006.01)
A43B 7/12	(2006.01)
A43B 3/02	(2006.01)
A43B 23/02	(2006.01)
A43B 23/06	(2006.01)

(52) **U.S. Cl.**
CPC . ***A43B 7/12*** (2013.01); ***A43B 3/02*** (2013.01); ***A43B 23/0235*** (2013.01); *A43B 23/06* (2013.01)

(58) **Field of Classification Search**
CPC A43B 7/12; A43B 3/02; A43B 5/002; A43B 23/02; A43B 23/022; A43B 23/0205; A43B 23/0215; A43B 23/0235; A43B 23/026; A43B 23/06; A43B 23/07
USPC 36/55, 83, 88, 93, 109
See application file for complete search history.

(56) **References Cited**

U.S. PATENT DOCUMENTS

2,838,854 A * 6/1958 Dosmann A43B 3/02 36/4
3,691,658 A * 9/1972 Di Perno A43B 3/02 36/4
3,823,493 A 7/1974 Brehm et al.
4,022,261 A * 5/1977 Russell A45C 13/08 150/101
4,051,613 A * 10/1977 Collins A43B 5/00 36/114
4,428,089 A * 1/1984 Dawber ..... A43B 5/0405 12/142 R
4,516,336 A * 5/1985 Nissenbaum ..... A43B 3/16 36/7.1 R
4,883,207 A * 11/1989 McArthur A45F 3/04 190/113
4,930,175 A * 6/1990 Chen ..... A43B 7/125 12/142 E
5,526,907 A * 6/1996 Trawick A45C 3/10 190/111
5,729,915 A * 3/1998 Khoo ..... A43B 3/16 36/7.1 R
5,946,822 A * 9/1999 Maturaporn ..... A43B 1/06 36/7.1 R
5,950,333 A 9/1999 Tsen
6,290,114 B1 * 9/2001 Berberian A45F 3/04 224/637

(Continued)

Primary Examiner — Anna Kinsaul
Assistant Examiner — Jameson Collier

(57) **ABSTRACT**

A waterproof boot assembly provides waterproof boots that can be collapsed and stored in a storage case while not in use. The assembly includes a boot having an upper end, a lower end, and a perimeter wall extending between the upper and lower ends. The perimeter wall defines a hollow body having the upper end being open. The boot is comprised of a waterproof material. A sole has a top side being attached to the lower end. A first pad is coupled to the boot. The first pad is positioned in and lines the hollow body. A second pad is coupled to the first pad such that the first pad is positioned between the boot and the second pad.
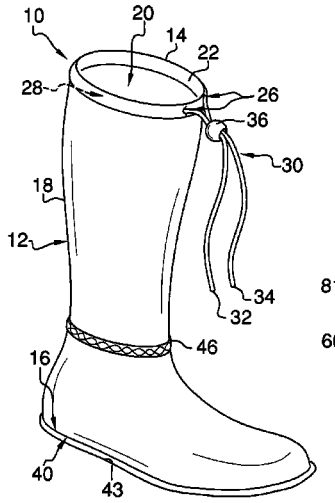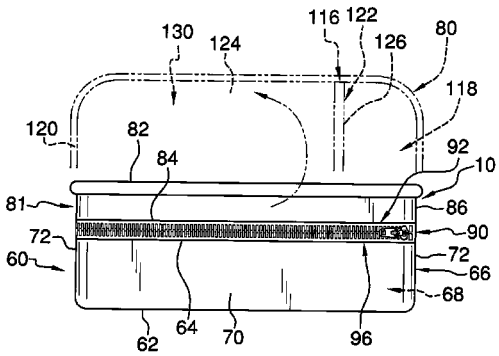
13 Claims, 3 Drawing Sheets