US009410341B1

(12) **United States Patent**
Welch

(10) **Patent No.: US 9,410,341 B1**
(45) **Date of Patent: Aug. 9, 2016**

(54) **CANOPY AND TABLE FRAME ASSEMBLY**

(71) Applicant: **John R. Welch**, Austin, TX (US)

(72) Inventor: **John R. Welch**, Austin, TX (US)

(*) Notice: Subject to any disclaimer, the term of this patent is extended or adjusted under 35 U.S.C. 154(b) by 0 days.

(21) Appl. No.: **14/847,591**

(22) Filed: **Sep. 8, 2015**

Related U.S. Application Data

(60) Provisional application No. 62/061,920, filed on Oct. 9, 2014.

(51) **Int. Cl.**

E04H 15/02	(2006.01)
E04H 15/34	(2006.01)
E04H 4/10	(2006.01)
E04H 15/58	(2006.01)

(52) **U.S. Cl.**
CPC ***E04H 15/02*** (2013.01); ***E04H 4/108*** (2013.01); ***E04H 15/34*** (2013.01); ***E04H 15/58*** (2013.01)

(58) **Field of Classification Search**
CPC E04H 1/1222; E04H 15/02; E04H 15/18; E04H 15/34; E04H 15/58; E04H 4/108; A47B 83/04
USPC 135/20.1, 117, 143, 155, 157, 161; 52/36.2, 36.4; 108/47, 50.12; 4/494, 4/496, 498, 503
See application file for complete search history.

(56) **References Cited**

U.S. PATENT DOCUMENTS

1,407,040	A	*	2/1922	Myers	E04H 15/003 135/118
1,846,011	A	*	2/1932	Adams	E04H 15/48 135/117
1,961,915	A	*	6/1934	Salmen, Jr.	E04H 15/324 135/143
2,130,919	A	*	9/1938	Erickson	E04H 15/46 135/118
2,151,908	A	*	3/1939	Gottlieb	E04B 1/3441 135/117
2,182,283	A	*	12/1939	Curtis	E04H 15/48 135/117
2,492,198	A	*	12/1949	Smith	A47F 5/108 135/117
2,836,860	A	*	6/1958	Staropoli	E04B 1/34326 108/158.11
2,890,498	A	*	6/1959	Bigelow	E04H 15/008 135/143
2,912,703	A	*	11/1959	Murphy	E04H 4/084 135/148
2,970,600	A	*	2/1961	Schultz	E04H 15/003 135/118
3,002,195	A		10/1961	Prudek	
3,101,731	A		8/1963	Stiglin	
3,744,195	A	*	7/1973	Ferkich	E04H 1/1272 135/117
3,854,149	A		12/1974	Mischke	
D274,157	S	*	6/1984	Freeland	D25/56
5,035,253	A	*	7/1991	Bortles	E04H 15/50 135/117
5,135,192	A	*	8/1992	Winkler	E04H 12/2223 248/156

(Continued)

FOREIGN PATENT DOCUMENTS

CA	2088948	A *	8/1994	
FR	2753220	A1 *	3/1998	E04H 1/1222
FR	3007444	A1 *	12/2014	

Primary Examiner — Robert Canfield
(74) *Attorney, Agent, or Firm* — Robert C. Montgomery; Montgomery Patent and Design, LP.

(57) **ABSTRACT**

A canopy and table frame assembly includes a frame formed by a plurality of interconnected frame members. A canopy is connected to an upper portion of the frame members. A portion of the frame members and the canopy are positioned over at least a portion of an above ground pool. The frame includes a pool side bar connected between frame members.
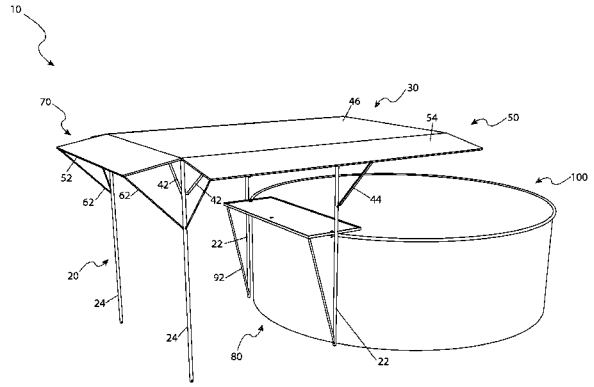
8 Claims, 6 Drawing Sheets