US009409441B2

(12) **United States Patent**
**Mayer Pujadas et al.**

(10) **Patent No.: US 9,409,441 B2**
(45) **Date of Patent: Aug. 9, 2016**

(54) **PUSH ON PLASTIC WHEEL TRIM**

(71) Applicants: **Augusto Mayer Pujadas**, Sant Cugat del Vallès (ES); **Guillem Domínguez Santaló**, Barcelona (ES)

(72) Inventors: **Augusto Mayer Pujadas**, Sant Cugat del Vallès (ES); **Guillem Domínguez Santaló**, Barcelona (ES)

(73) Assignee: **ZANINI AUTO GRUP, SA**, Barcelona (ES)

( * ) Notice: Subject to any disclaimer, the term of this patent is extended or adjusted under 35 U.S.C. 154(b) by 619 days.

(21) Appl. No.: **13/796,230**

(22) Filed: **Mar. 12, 2013**

(65) **Prior Publication Data**

US 2014/0265532 A1 Sep. 18, 2014

(51) **Int. Cl.**

| | |
|---|---|
| ***B60B 7/06*** | (2006.01) |
| ***B60B 3/16*** | (2006.01) |
| ***B60B 7/14*** | (2006.01) |
| ***F16B 37/14*** | (2006.01) |
| *F16B 5/06* | (2006.01) |

(52) **U.S. Cl.**

CPC . ***B60B 7/06*** (2013.01); ***B60B 3/165*** (2013.01); ***B60B 7/068*** (2013.01); ***B60B 7/14*** (2013.01); ***F16B 37/14*** (2013.01); *F16B 5/065* (2013.01); *Y10T 29/49826* (2015.01)

(58) **Field of Classification Search**

CPC ..... B60B 7/12; B60B 7/14; B60B 7/066; B60B 7/04; B60B 7/08; B60B 7/068; F16B 37/0864; F16B 37/14; F16B 37/0828; F16B 37/0842; F16B 37/0857

See application file for complete search history.

(56) **References Cited**

U.S. PATENT DOCUMENTS

| | | | | | |
|---|---|---|---|---|---|
| 4,133,583 | A | * | 1/1979 | Spisak | 301/37.34 |
| 4,382,635 | A | * | 5/1983 | Brown et al. | 301/37.35 |
| 4,998,780 | A | * | 3/1991 | Eshler et al. | 301/37.375 |
| 5,181,767 | A | * | 1/1993 | Hudgins et al. | 301/37.375 |
| 5,249,845 | A | * | 10/1993 | Dubost | 301/37.373 |
| 5,297,854 | A | * | 3/1994 | Nielsen et al. | 301/37.373 |
| 5,667,281 | A | * | 9/1997 | Ladouceur | 301/37.375 |
| 5,842,749 | A | * | 12/1998 | DiMarco | 301/37.375 |
| 5,918,946 | A | * | 7/1999 | DiMarco | 301/37.375 |
| 6,017,096 | A | * | 1/2000 | Russell | 301/37.36 |
| 6,030,049 | A | * | 2/2000 | Russell | 301/37.375 |
| 6,070,947 | A | * | 6/2000 | Hoyle, Jr. | 301/37.375 |
| 6,135,570 | A | * | 10/2000 | Wieczorek | 301/37.374 |
| 6,783,189 | B1 | * | 8/2004 | Russell et al. | 301/37.12 |
| 7,387,346 | B2 | * | 6/2008 | Sabanes et al. | 301/37.373 |
| 7,722,128 | B2 | * | 5/2010 | Russell et al. | 301/37.373 |

(Continued)

FOREIGN PATENT DOCUMENTS

| | | |
|---|---|---|
| WO | WO 2004/091935 A | 10/2004 |
| WO | WO 2004091935 A1 | 10/2004 |

*Primary Examiner* — Hau Phan
*Assistant Examiner* — Jacob Meyer
(74) *Attorney, Agent, or Firm* — Seth Natter; Natter & Natter

(57) **ABSTRACT**

A push on plastic wheel trim includes a disc and plastic lug nut caps seated in apertures formed in the disc. Each cap includes at least one axial panel having a lug nut engaging surface projecting from its inner face and at least one aperture engaging leg, having a flange projecting from its outer face. The lug nut engaging surface may comprise a partial thread segment configured to snap into the roots of external threads formed on the lug nuts or a lip which snaps over an annular lug nut flange. The caps are retained in the apertures by the leg flange engaging the inner face of the wheel cover disc and an annular cap flange which engages the outer face of the disc.
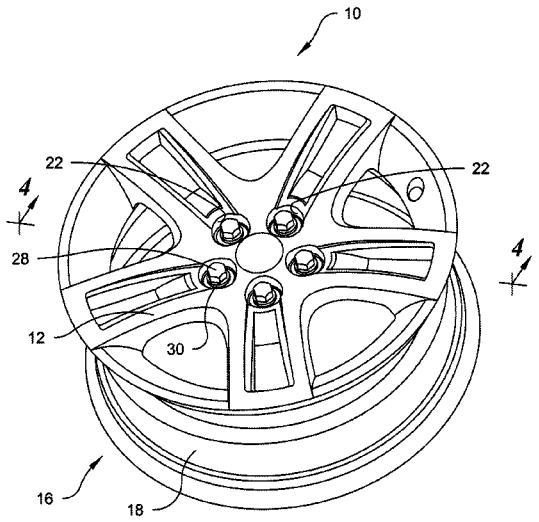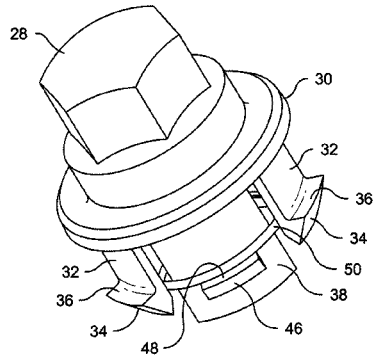
**15 Claims, 4 Drawing Sheets**