US009408941B2

(12) **United States Patent**
Locke et al.

(10) **Patent No.: US 9,408,941 B2**
(45) **Date of Patent: Aug. 9, 2016**

(54) **TISSUE TREATMENT SYSTEMS AND METHODS HAVING A NON-TACTILE-STIMULUS-ACTIVATED, MACROSCOPICALLY-DEFORMING MATERIAL**

(75) Inventors: **Christopher Brian Locke**, Bournemouth (GB); **Timothy Mark Robinson**, Basingstoke (GB)

(73) Assignee: **KCI Licensing, Inc.**, San Antonio, TX (US)

(*) Notice: Subject to any disclaimer, the term of this patent is extended or adjusted under 35 U.S.C. 154(b) by 943 days.

(21) Appl. No.: **13/559,307**

(22) Filed: **Jul. 26, 2012**

(65) **Prior Publication Data**

US 2013/0072850 A1 Mar. 21, 2013

Related U.S. Application Data

(60) Provisional application No. 61/536,981, filed on Sep. 20, 2011.

(51) **Int. Cl.**
A61L 15/42 (2006.01)
A61L 15/22 (2006.01)

(52) **U.S. Cl.**
CPC ***A61L 15/42*** (2013.01); ***A61L 15/22*** (2013.01); *A61L 2400/16* (2013.01)

(58) **Field of Classification Search**
CPC A61L 15/22; A61L 15/42; A61L 2400/16
See application file for complete search history.

(56) **References Cited**

U.S. PATENT DOCUMENTS

1,355,846	A	10/1920	Rannells
2,547,758	A	4/1951	Keeling
2,632,443	A	3/1953	Lesher
2,682,873	A	7/1954	Evans et al.
2,910,763	A	11/1959	Lauterbach
2,969,057	A	1/1961	Simmons
3,066,672	A	12/1962	Crosby, Jr. et al.
3,367,332	A	2/1968	Groves
3,520,300	A	7/1970	Flower, Jr.
3,568,675	A	3/1971	Harvey
3,648,692	A	3/1972	Wheeler
3,682,180	A	8/1972	McFarlane
3,826,254	A	7/1974	Mellor
4,080,970	A	3/1978	Miller

(Continued)

FOREIGN PATENT DOCUMENTS

AU	550575 A1	3/1986
AU	745271	4/1999

(Continued)

OTHER PUBLICATIONS

International Search Report and Written Opinion for corresponding PCT/US2012/048370, mailed Nov. 7, 2012.

(Continued)

Primary Examiner — Leslie Deak
Assistant Examiner — Kai Weng

(57) **ABSTRACT**

A system for treating a tissue site of a patient includes a dressing filler adapted to be positioned at the tissue site. The dressing filler includes a base and a plurality of nodes extending from the base. The base further includes a plurality of openings disposed in the base. At least one of the plurality of nodes is comprised of a non-tactile-stimulus-activated, macroscopically-deforming (NTSAMD) material.
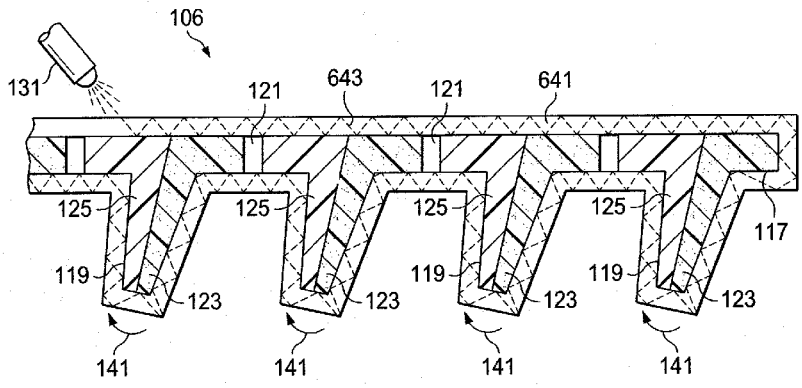
27 Claims, 9 Drawing Sheets