Figure 1A:

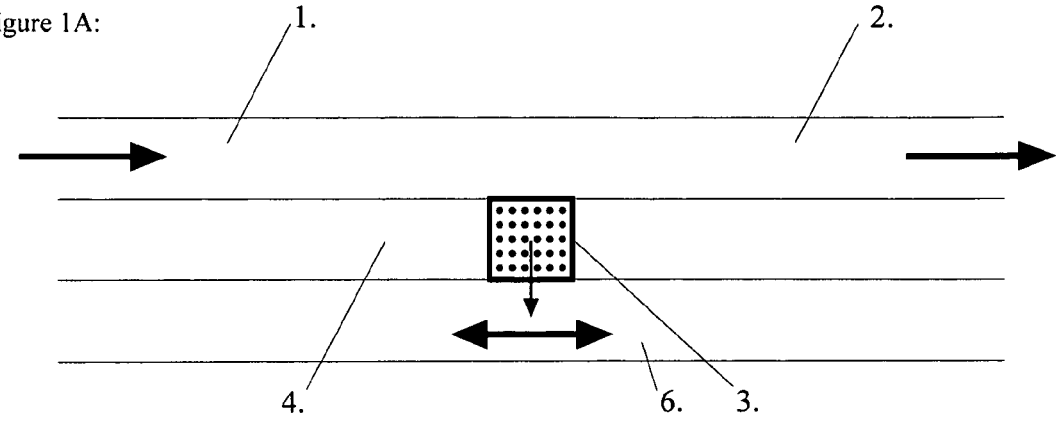

Figure 1B:

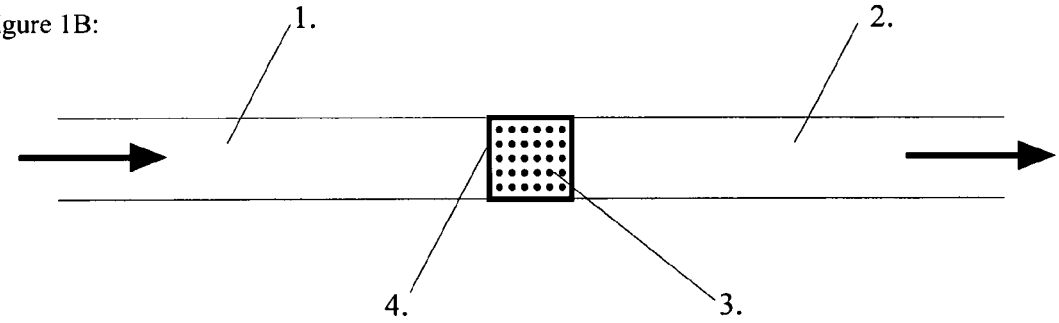

Figure 1C:

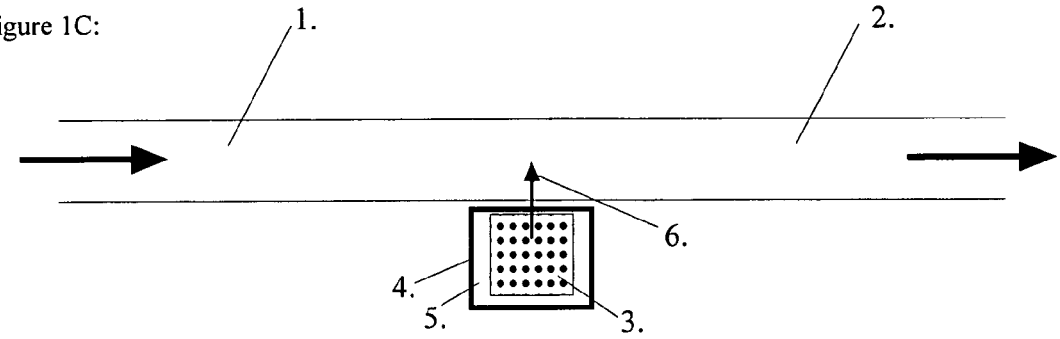
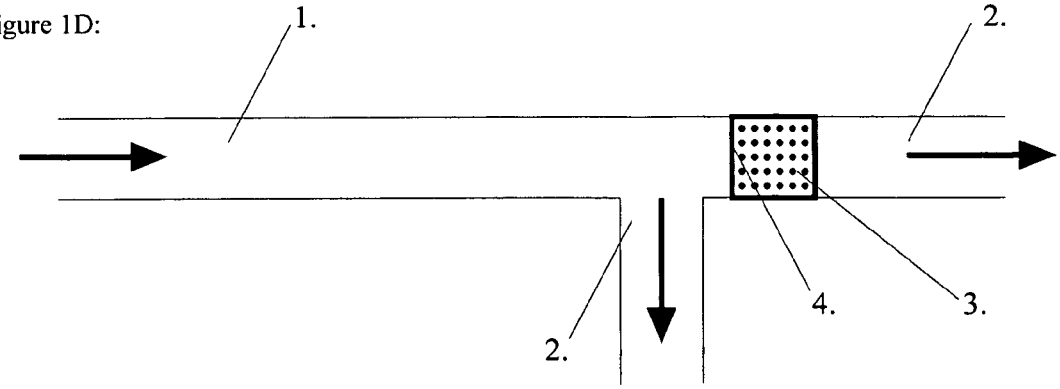
Figure 1D: