United States Patent [19]

Washizuka et al.

[11] **Patent Number: 4,692,740**

[45] **Date of Patent: Sep. 8, 1987**

[54] **KEY INPUT DEVICE**

[75] Inventors: **Isamu Washizuka,** Kyoto; **Kiyoshi Kinugawa,** Nara, both of Japan

[73] Assignee: **Sharp Kabushiki Kaisha,** Osaka, Japan

[21] Appl. No.: **581,799**

[22] Filed: **Feb. 21, 1984**

[30] **Foreign Application Priority Data**

Feb. 21, 1983 [JP] Japan ..... 58-24563[U]

[51] **Int. Cl.**[4] **G06F 3/02**

[52] **U.S. Cl.** ..... **340/365 R;** 340/365 VL

[58] **Field of Search** ..... 340/365 R, 365 S, 365 A, 340/365 E, 711, 712, 365 C; 235/145 R, 146; 364/189, 700, 705, 709

[56] **References Cited**

U.S. PATENT DOCUMENTS

3,940,758 2/1976 Margolin ..... 340/365 R
3,971,925 7/1976 Wenninger et al. ..... 340/365 VL
4,086,655 4/1978 Tanimoto et al. 340/705
4,120,039 10/1978 Fischer 364/709
4,122,526 10/1978 Dlugos et al. 364/705
4,330,776 5/1982 Dennison, Jr. et al. ..... 340/365 R
4,359,222 11/1982 Smith, III et al. 340/711
4,523,297 6/1985 Ugon et al. 364/709

FOREIGN PATENT DOCUMENTS

0096334 6/1983 Japan ..... 340/365 R

Primary Examiner—John W. Caldwell, Sr.
Assistant Examiner—Mahmoud Fatahi-yar
Attorney, Agent, or Firm—Birch, Stewart, Kolasch & Birch

[57] **ABSTRACT**

A key input device to be attached to an electronic apparatus includes a keyboard having a plurality of key switches, and an exchangeable connector that is connectable to a body of the electronic apparatus for enabling the keyboard to be selected so that information is inputted into the electronic apparatus by the keyboard.
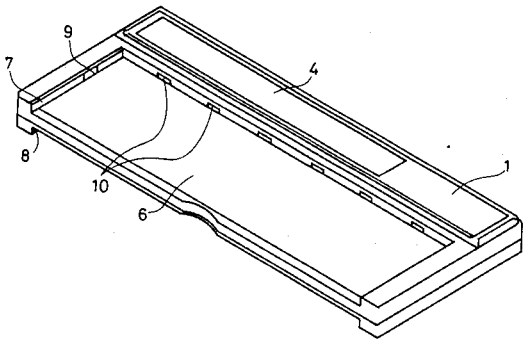
8 Claims, 6 Drawing Figures