Fig.1

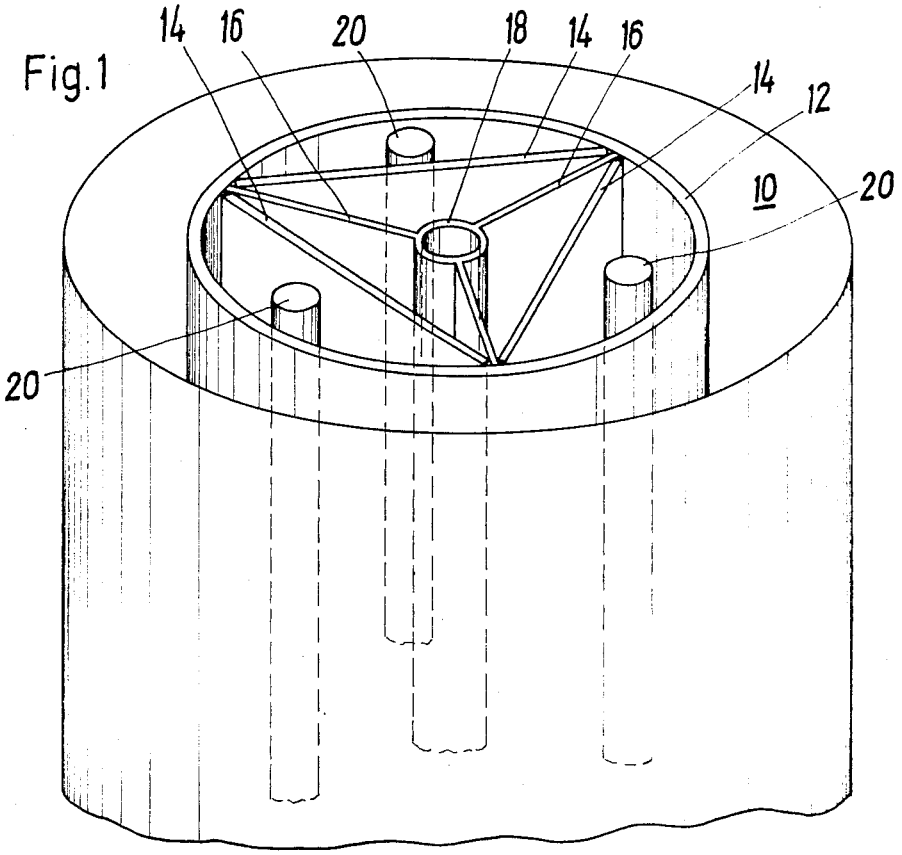

Fig.2

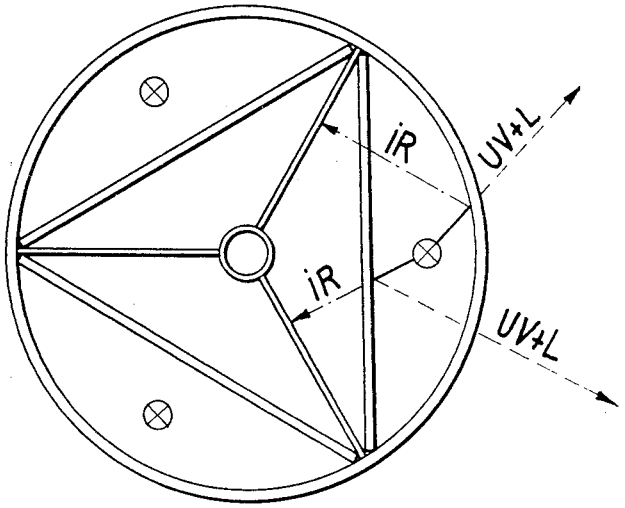

Inventor:
DIETER KOCKOTT
BY Sughrue, Rothwell, Mion, Zinn & Macpeak
ATTORNEYS