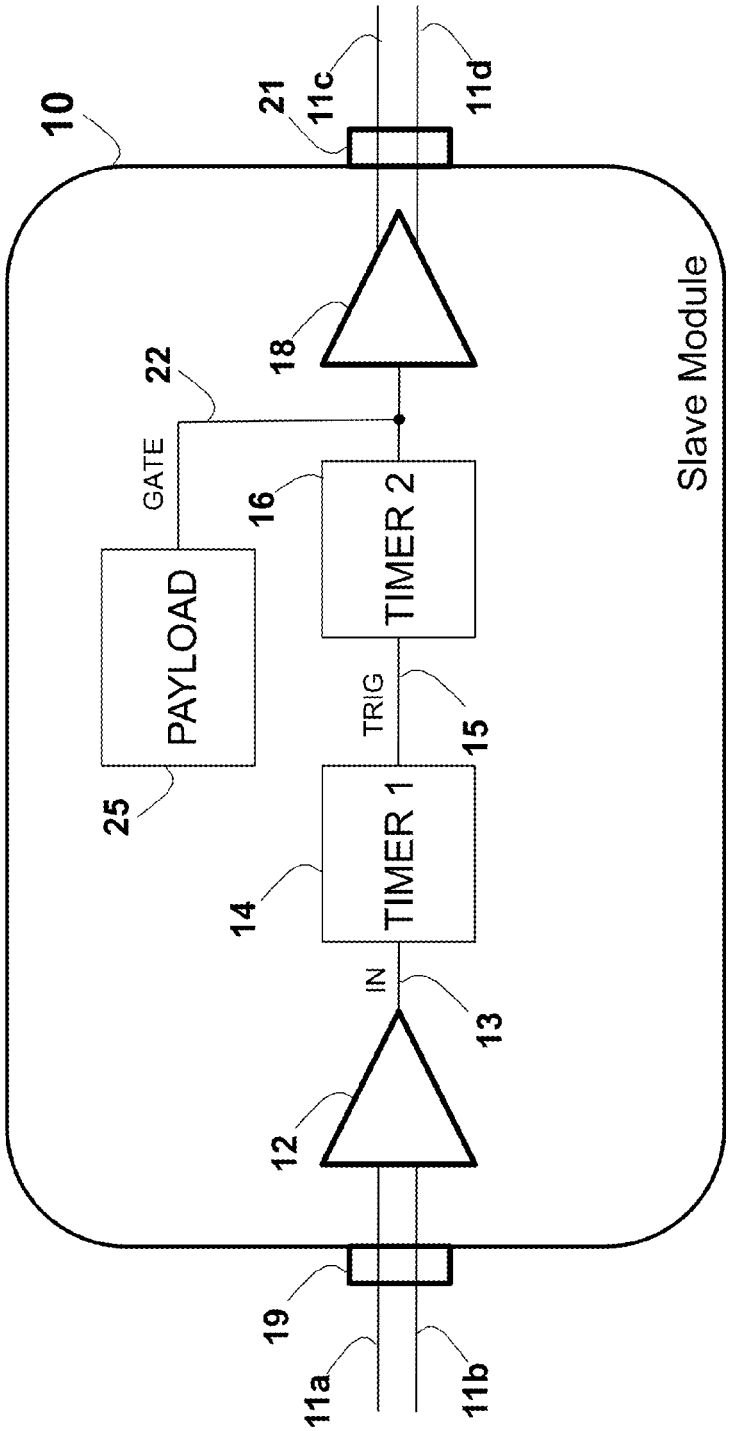
10
21
11c
11d
Slave Module
18
22
GATE
16
TIMER 2
PAYLOAD
TRIG
15
25
14
TIMER 1
IN
13
12
19
11a
11b

FIG. 1