No. 778,540. PATENTED DEC. 27, 1904.

H. HERDER.

SAFETY RAZOR.

APPLICATION FILED DEC. 24, 1903.

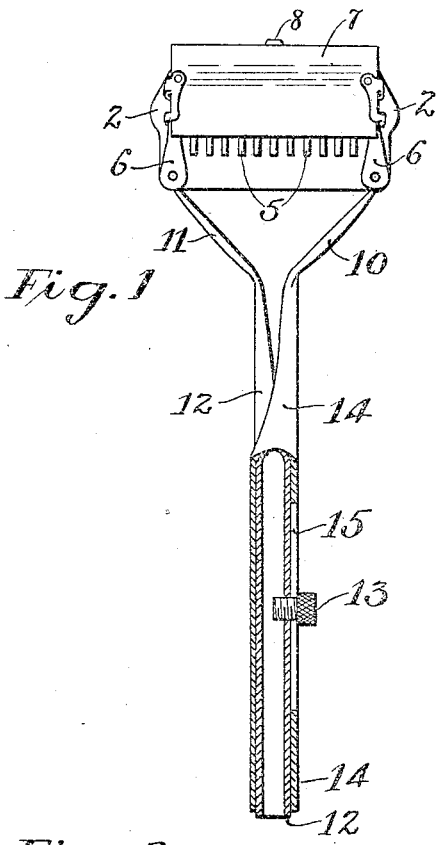

Fig. 1

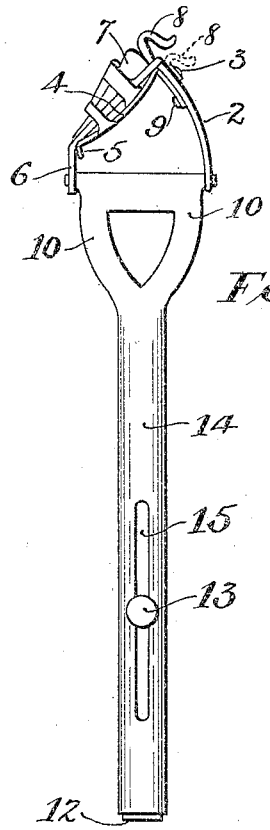

Fig. 2.

Fig. 3.

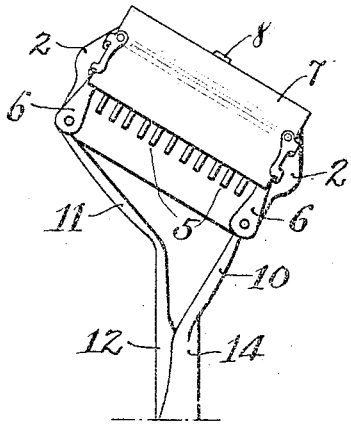

Fig. 4.

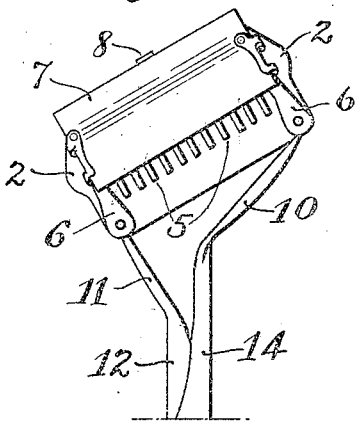

WITNESSES:

W. H. Leanby

H. L. Gamble

INVENTOR

Herman Herder

BY

H. V. Newton

ATTORNEY.